Xerox® Phaser® 3020BI
User Guide

©2019 Xerox Corporation. All Rights Reserved. Xerox® and Xerox and Design® are registered trademarks of Xerox Corporation in the United States and/or other countries.

Phaser®, CentreWare®, WorkCentre®, FreeFlow®, SMARTsend®, Scan to PC Desktop®, MeterAssistant®, SuppliesAssistant®, Xerox Secure Access Unified ID System®, and Xerox Extensible Interface Platform® are trademarks of Xerox Corporation in the United States and/or other countries.

Adobe® Reader® and PostScript® are trademarks of Adobe Systems Incorporated in the United States and/or other countries.

Macintosh and Mac OS are trademarks of Apple Inc., registered in the U.S. and other countries.

AirPrint and the AirPrint logo are trademarks of Apple Inc.

PCL® is a trademark of Hewlett-Packard Corporation in the United States and/or other countries.

IBM® and AIX® are trademarks of International Business Machines Corporation in the United States and/or other countries.

Microsoft®, Windows Vista®, Windows®, and Windows Server® are trademarks of Microsoft Corporation in the United States and other countries.

Novell®, NetWare®, NDPS®, NDS®, IPX™, and Novell Distributed Print Services™ are trademarks of Novell, Inc. in the United States and other countries.

Sun, Sun Microsystems, and Solaris are trademarks or registered trademarks of Oracle and/or its affiliates in the United States and other countries.

UNIX® is a trademark in the United States and other countries, licensed exclusively through X/ Open Company Limited.

Linux is a registered trademark of Linus Torvalds.

Red Hat® is a registered trademark of Red Hat, Inc.

Fedora is a trademark of Red Hat, Inc.

Ubuntu is a registered trademark of Canonical Ltd.

Debian is a registered trademark of Software in the Public Interest, Inc.

Contents

1 Getting Started

Machine Overview 2
- Front View 2
- Rear View 3

Product Configurations 4
Control Panel 5
Powering On the Machine 7
- Power Save 7

Software 8
Information Pages 9
- Configuration Report 9
- Xerox® CentreWare® Internet Services 10

More Information 11
Further Assistance 12
- Xerox Support Center 12
- Documentation 12

2 Installation and Setup

Wireless Connectivity 14
- Print a Configuration Report 14

CentreWare® Internet Services 15
- CentreWare® Internet Services Administrator Access 15
- Change the Administrator Password 16
- Setting the Ethernet Speed Using CentreWare Internet Services 16
- Adjusting the Altitude 17

Network Installation 18
- TCP/IP 18

Printer Drivers 21
- Overview 21

Windows Drivers 22
- Installing Windows Drivers 22

Wireless Setting Program 26
- Configuring Wi-Fi DirectTM using CentreWare Internet Services 26
- Uninstalling a Windows Driver 27

Macintosh Drivers 28
- Procedure 28
- Uninstalling a Macintosh Driver 29

Linux Drivers 30

Sharing Your Machine Locally 31
Windows 31
Macintosh 32
Windows Printing 33
LPR Printing 33
Internet Printing Protocol (IPP) Port 34
Raw TCP/IP Printing (Port 9100) 35
Configure the Windows Printer Driver 36
AirPrint 37
Google Cloud Print 38

3 Paper and Media

Loading Paper 40
Preparing Paper for Loading 40
Using Tray 1 40
Setting Paper Size and Type 42
Media Specifications 43
Media Guidelines 43
Media Types 44
Media Output Location 46
Using the Output Tray 46

4 Print

Printing using Windows 48
Print Procedure 48
Favorites Tab 48
Printer Status 49
Basic Tab 50
Paper Tab 51
Graphics Tab 52
Advanced Tab 52
Earth Smart 55
Xerox Tab 55
Xerox Easy Printer Manager (EPM) 56
Printing Using Macintosh 57
Printing a Document 57
Changing Printer Settings 57
Using AirPrint 59
Using Google Cloud Print 59
Printing Using Linux 60
Printing from Applications 60
Printing Files 60
Configuring Printer Properties 60
Printing Using Unix 62
Printing Files 62
Configuring Printer Properties 62

5 Security

Security at Xerox 66
Security Settings 66
Administrator Accounts 66
Feature Management 67
Restart Device 67
Machine Digital Certificate Management 68
SNMP 73
SNMPv3 75
IP Sec 76
IP Filtering 77
Overview 77
Enable IP Filtering 77
802.1X Authentication 79
Overview 79
Information Checklist 79

6 Maintenance

Consumables 82
Placing an Order for Xerox Consumables: 82
Checking the Status of Consumables 83
Storage and Handling of Consumables 84
General Care 85
Redistributing Toner 85
Replacing the Print Cartridge 86
Recycling Consumables 87
Cleaning the Machine 88
Moving the Machine 90
Software Update 91
The Software Upgrade Process 91
Procedure 91

7 Troubleshooting

Overview 94
Machine Status Indicator 94
Avoiding Paper Jams 95
Clearing Paper Jams 96
Common Problems 99
Paper Feeding Problems 99
Print Quality Problems 102
Further Assistance 109
Locating the Serial Number 109
Printing Configuration Report 109

8 Specifications

Machine Specifications 112
Machine Configurations 112
Print Specifications 113
Media Specifications. 114
Network Environment 115
System Requirements 116
Microsoft® Windows® 116
Macintosh 116
Linux 117
Electrical Specifications. 118
Environmental Specifications 119

9 Safety

Electrical Safety 122
General Guidelines 122
Power Cord. 122
Emergency Turn Off 123
Laser Safety. 123
Operational Safety 124
Operational Guidelines. 124
Ozone Release. 124
Printer Location 124
Printer Supplies. 125
Maintenance Safety. 126
Printer Symbols. 126
Environmental, Health, and Safety Contact Information 128

10 Regulatory

Basic Regulations 130
United States (FCC Regulations). 130
Canada 130
European Union 130
European Union Lot 4 Imaging Equipment Agreement Environmental Information. 131
Germany. 133
Turkey RoHS Regulation 133
Regulatory information for 2.4 Ghz Wireless LAN Module 133
Material Safety Data 134

11 Recycling and Disposal

All Countries 136
Perchlorate Material 136
North America 137

European Union 138
Domestic/Household Environment 138
Professional/Business Environment 138
Collection and Disposal of Equipment and Batteries 138
Battery Symbol Note 139
Battery Removal 139
Other Countries 140

Getting Started

1

This chapter includes:

- Machine Overview
- Product Configurations
- Control Panel
- Powering On the Machine
- Software
- Information Pages
- More Information
- Further Assistance

Machine Overview

Before you use your machine, take some time to familiarize yourself with the various features and options.

Front View

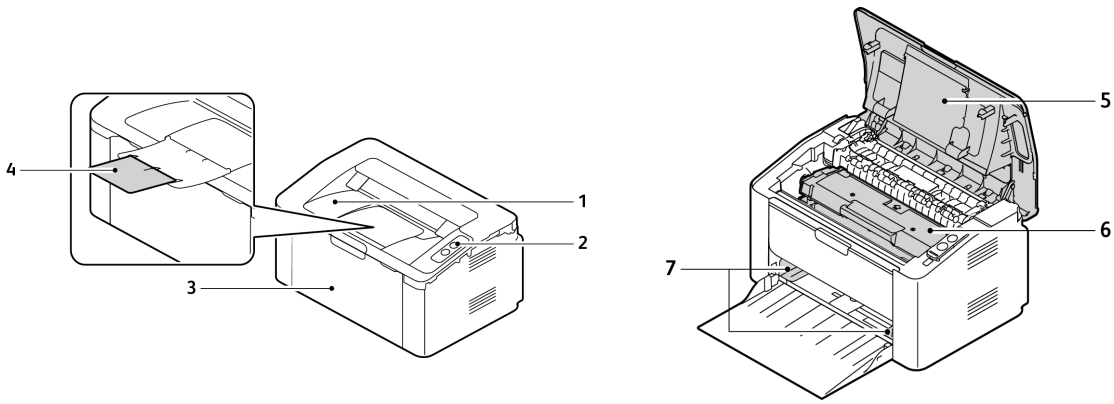

1	Output Tray
2	Control Panel
3	Paper Tray 1
4	Output Support
5	Top Cover
6	Print Cartridge
7	Paper Width Guide

Rear View

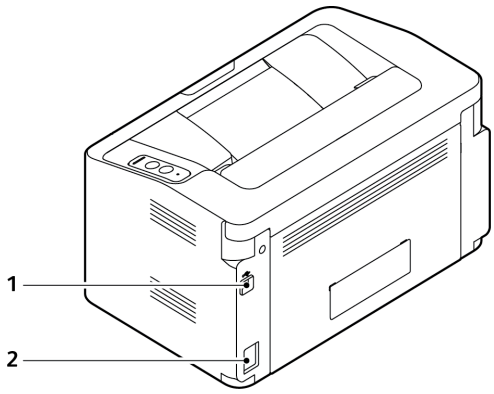

1	USB Port
2	Power Receptacle

Product Configurations

Component	Phaser 3020BI
Paper Tray 1 (150 sheets)	Standard
Output Tray (100 sheets)	Standard
Network Printing	Not Applicable
AirPrint	Standard
Google Cloud Print	Standard
USB Device	Standard
USB Host	Not Applicable
Wi-Fi	Standard
Wi-Fi Direct™	Standard

Control Panel

The control panel consists of buttons you press to control the functions available on the printer.

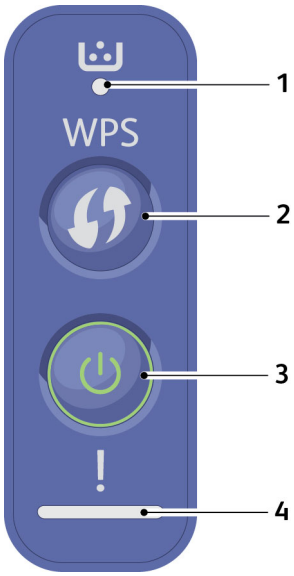

.

Number	Button	Description
1		**Toner LED**: Shows the status of the toner. Displays a blinking light when the toner level is low. Displays a solid light when the toner is out.
2		**WPS**: Configures the wireless network connection without a computer. Configuration sheet: Press and hold this button for about 10 seconds until the green LED blinks slowly. Supplies info report/usage count report: Press and hold this button for about 15 seconds until the green LED is on. Manual print: Press this button each time you load a sheet of paper in the tray if you selected Manual Feeder as the Source in your printer driver.

Number	Button	Description
3		**Power**: Turns the power off or wakes the machine from sleep mode.
4		**Status LED**: Shows the status of your machine.

Powering On the Machine

The power button is located on the control panel. The power cable socket is located at the rear of the printer.

1. Connect the AC Power Cord to the machine and a power outlet. The power cord must be plugged into a grounded power socket.
2. Press the **Power** button on the control panel.

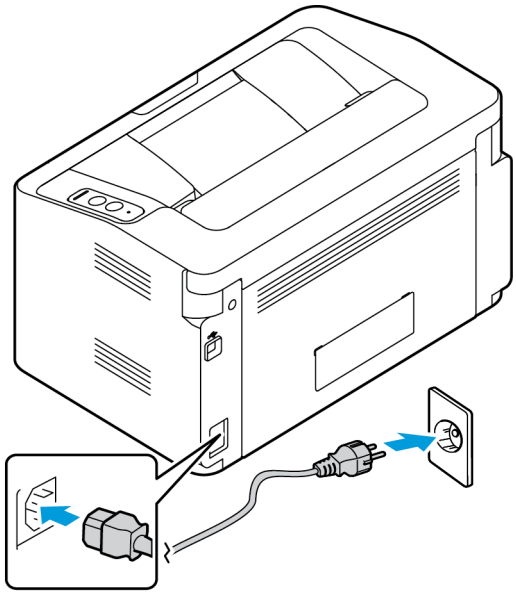

Power Save

This machine contains advanced energy conservation technology that reduces power consumption when it is not in active use. When the printer does not receive data for an extended period of time, the Power Save mode becomes active and power consumption is automatically lowered.

To restore the machine to a normal state, press the **Power** button.

Software

After you have set up your machine and connected it to your computer, you must install the printer software. The software required for Windows or Macintosh is supplied on the CD delivered with your machine. Additional software can be downloaded from www.xerox.com. The following software is available:

CD	Operating System	Contents
Printer Software	Windows	• Printer Driver: Use the printer driver to take full advantage of your printer's features. • Xerox Easy Print Manager (EPM): Conveniently combines access to device settings, printing environments, settings/actions, and launching applications such as CentreWare Internet Services in one location. Note: Login is required to change Printer Settings. • Wireless Setting Program: When installing the printer, you can use the Wireless Setting program that was automatically installed with the printer driver to configure the wireless settings. • SetIP Program: A utility program allowing you to select a network interface and manually configure the addresses for use with the TCP/IP protocol.
Printer Software	Linux	• Printer Driver: Use this driver to take full advantage of your printer's features. Note: Linux software is available on www.xerox.com only.
Printer Software	Macintosh	• Printer Driver: Use this driver to take full advantage of your printer's features. • SetIP Program: A utility program allowing you to select a network interface and manually configure the addresses for use with the TCP/IP protocol.

Information Pages

This option allows the user to print the following reports:

Report	Description
Configuration	This report provides information about your machine setup, including the serial number, IP Address, installed options and the software version.
Demo Page	The demo page is printed to check the quality of the print.
Supplies Info	Prints the supplies information page.
Network Configuration	This list shows information about your machine's network connection and configuration.
Usage Counter	This list shows the number of impressions made on the machine. The list includes: • Total Impressions • Black Impressions • Maintenance Impressions • Sheets

Configuration Report

The Configuration Report lists printer information such as default settings, network settings including IP address, and font settings. Use the information on the configuration page to help you configure network settings for your printer, and to view page counts and system settings.

Printing a Configuration Report:

Press and hold the **WPS** button for 10 seconds. The green LED light flashes, goes solid, and then flashes again. Release then.

You can view the IP address of your printer on the Configuration Report. IPv4 and IPv6 address information is located in the Network Setup section of the Configuration Report under IPv4 and IPv6.

Note: You can also print the Configuration Report using CentreWare Internet Services by selecting **Status** > **Print Information**.

Xerox® CentreWare® Internet Services

Xerox® CentreWare® Internet Services is the administration and configuration software installed on the embedded Web server in the printer. It allows you to configure and administer the printer from a Web browser.

Xerox® CentreWare® Internet Services requires:

- A TCP/IP connection between the printer and the network in Windows, Macintosh, or Linux environments.
- TCP/IP and HTTP enabled in the printer.
- A network-connected computer with a Web browser that supports JavaScript.

Accessing Xerox® CentreWare® Internet Services

At your computer, open a Web browser, in the address field, type the IP address of the printer, then press **Enter** or **Return**.

More Information

You can obtain more information about your printer from these sources:

Resource	Location
Other printer documentation	www.xerox.com/office/3020docs
Technical support information for your printer; including online technical support and driver downloads.	www.xerox.com/office/3020support
Demo Page	The demo page is printed to check the quality of the print.
Information Pages	From Xerox® CentreWare® Internet Services, click **Status** > **Print Information.**
Xerox® CentreWare® Internet Services documentation	In Xerox® CentreWare® Internet Services, click **Help**.
Order supplies for your printer	www.xerox.com/office/3020supplies
A resource for tools and information, including interactive tutorials, printing templates, helpful tips, and customized features to meet your individual needs.	www.xerox.com/office/businessresourcecenter
Local sales and support center	www.xerox.com/office/worldcontacts
Printer registration	www.xerox.com/office/register
Xerox® Direct online store	www.direct.xerox.com/
Management Information Base (MIB)	A MIB is a database of objects that can be accessed by a network management system. Xerox public MIBs are located at: http://origin-download.support.xerox.com/pub/drivers/MIBs/ Customers can download the MIBs and use their SNMP tool to obtain the required information. Note: All information presented on the Local UI display is also presented in the MIB and CentreWare Internet Services. This includes phone numbers and passwords as they are being entered. If this presents a security concern, Xerox recommends enabling the SNMPv3 and the IP Filtering security feature in order to control remote access to the device.

Further Assistance

For any additional help visit our customer Web site at www.xerox.com or contact the Xerox Support Center quoting the machine serial number.

Xerox Support Center

If a fault cannot be resolved by following the display instructions, check the Troubleshooting chapter of this guide. If the difficulty persists, contact the Xerox Support Center. The Xerox Support Center will want to know the nature of the problem, the machine serial number, the fault code if any, plus the name and location of your company.

The Machine Serial Number can be found on the Configuration Report under 'Device Profile'. The serial number is also located on the data plate on the rear cover of the device.

Documentation

Most answers to your questions will be provided by this User Guide. Alternatively, you can access www.xerox.com/support for additional support and for the following documents:

- Install Guide - contains information about installing the machine.
- Quick Use Guide - provides basic information on how to use the machine.

Installation and Setup 2

This chapter identifies the key settings that you can customize to meet your requirements. Changing these settings is easy and will save you time when using the machine.

Note: Some options may be unavailable depending on your machine configuration.

This chapter includes:

- Wireless Connectivity
- CentreWare® Internet Services
- Netowrk Installation
- Printer Drivers
- Windows Drivers
- Wireless Setting Program
- Macintosh Drivers
- Linux Drivers
- Sharing Your Machine Locally
- Windows Printing
- AirPrint
- Google Cloud Print

Wireless Connectivity

The Phaser 3020BI is compatible with 802.11 (Wi-Fi®) wireless networks. The location where the machine is installed must be covered by an 802.11 wireless network. This is typically provided by a nearby wireless access point or router, which is physically connected to the wired Ethernet that serves the building.

The machine supports connectivity via a wireless only connection.

Note: Performing the driver installation at this time may aid wireless setup. Refer to Printer Drivers.

To configure Wireless Connectivity, use the Xerox Easy Wireless Setup. For instructions, see Wireless Setting Program.

To set the Ethernet Speed using CentreWare Internet Services, refer to Setting the Ethernet Speed Using CentreWare Internet Services.

Print a Configuration Report

The Configuration Report details the machine software versions and network settings configured for the machine.

At the printer control panel, press the **WPS** button for 10 seconds.

CentreWare® Internet Services

CentreWare® Internet Services is the embedded HTTP server application that resides in the machine. CentreWare Internet Services allows an administrator to change network and system settings on the machine from the convenience of their workstation.

Many features available on your machine will need to be set via the machine and CentreWare Internet Many of the features available within CentreWare Internet Services will require an Administrator user name and password. The default user name is admin and the default password is 1111.

CentreWare® Internet Services Administrator Access

To access CentreWare Internet Services Properties and change settings you will need to log in as Admininstrator.

1. At your workstation, open the Web browser and enter the IP Address of the machine in the Address Bar.
2. Press **Enter**. The **Home** page appears.

   There are two ways to access **CentreWare Internet Services** with the administrator login:
   - Select **Login** at the top of the screen or
   - Select the **Properties** icon. You are then prompted for the ID and Password.
3. Enter **admin** for the **ID** and **1111** for the **Password**.

Change the Administrator Password

It is recommended that you change the default administrator password to a more secure password, so this Xerox machine is not compromised.

1. At your workstation, open the Web browser and enter the IP Address of the machine in the Address Bar.
2. Press **Enter**.
3. Select the **Properties** icon.
4. If prompted, enter **admin** for the ID and **1111** for the Password, and select **Login.**
5. Click **Properties.**
6. In **Security** on the left hand side, select **System Security**.
7. Select **System Administrator**.
8. In the **Access Control** area:
   a. Ensure the**Web UI Access Control Enable** check box is selected.
   b. In the **Login ID** field, enter a new login name.
   c. Select the **Change password** box to change the password. In the **Password** field, enter a new numeric password.
   d. Enter the password again in the **Confirm Password** field.

⚠ **CAUTION:** Do not forget the password or you could be completely locked out of the system, requiring a service call.

9. Select **Apply** to save the changes.
10. Select **OK** when the acknowledgement message displays.
11. Select the **Advanced** button. The **Advanced Access Control** screen appears.
12. Select **Protect Login IPv4 Address** to enable this feature if required, and enter an **IPv4 Address** in the box.
13. Select the required option for the **Login Failure Policy**, for users who fail to login several times. The options are: **Off**, **3 times** or **5 times**.
14. Select the required option for **Auto Logout**. The options are **5, 10, 15** or **30 minutes**.
15. Select **Security Settings Reset** if required.
16. Select **Save** to save your changes.

Setting the Ethernet Speed Using CentreWare Internet Services

1. At your workstation, open the Web browser and enter the IP Address of the machine in the Address Bar.
2. Press **Enter**.
3. Select **Properties**.
4. If prompted, enter **admin** for the ID and **1111** for the Password, and select **Login**.
5. Click **Properties.**
6. In the **Network Settings** link select the **General** link.
7. Select one of the following speeds from the **Ethernet Speed** drop-down menu:

- Automatic
- 10 Mbps (Half Duplex)
- 10 Mbps (Full Duplex)
- 100 Mbps (Half Duplex)
- 100 Mbps (Full Duplex)

8. Select on **Apply** to save the changes.
   The change to Ethernet Speed rate will take effect after System Reboot screen appears.
9. Select **OK**.
10. When the **Acknowledgement** screen displays, select **OK**.
11. Reboot the machine.

Adjusting the Altitude

Print quality is affected by atmospheric pressure, which is determined by the height of the machine above sea level. The following information will guide you on how to set your machine for the best print quality.

Wi-Fi must be configured before you adjust the altitude. See Wireless Setting Program.

Before you set the altitude value, determine the altitude where you are.

Altitude	Value
0 - 1000 M 0 - 3,280 ft.	Normal
1000 - 2000 M 3,280 - 6,561 ft.	High 1
2000 - 3000 M 6,561 - 9,842 ft.	High 2
3000 - 4000 M 9,842 - 13,123 ft.	High 3
4000 - 5000 M 13,123 - 16,404 ft.	High 4

1. Enter the IP Address of the printer in the browser.
2. Select **Login** and enter the **ID** (admin) and **Password** (1111).
3. Select **Properties** > **System** > **Setup**.
4. Select an **Altitude Adjustment** value, based on your altitude in the table above.
5. Select **Apply**.

Network Installation

TCP/IP

These instructions show you how to configure the following via CentreWare Internet Services:

- TCP/IP v4 and v6
- Domain Name
- DNS
- Zero Configuration Networking

The machine supports TCP/IP versions 4 and 6. IPv6 can be used instead of or in addition to IPv4.

IPv4 and IPv6 settings can be configured via a web browser using CentreWare Internet Services. To configure TCP/IP settings using CentreWare Internet Services, refer to Configure TCP/IP Settings using CentreWare CentreWare Internet Services.

Configure TCP/IP Settings using CentreWare Internet Services

IPv4

1. At your workstation, open the Web browser and enter the IP Address of the machine in the Address Bar.
2. Press **Enter**.
3. Select **Properties**.
4. If prompted, enter the Administrator User Name (**admin**) and Password (**1111**), and select **Login.** Click **Properties.**
5. In **Network Settings** select **TCP/IPv4** from the directory tree. The **TCP/IPv4** page displays.
6. In the **Assign IPv4 Address** menu, select **Automatically** or **Manually**.
7. If **Manually** is selected, in the **TCP/IP Settings** area enter details of the machine in the following fields:
   a. IPv4 Address
   b. Subnet Mask
   c. Gateway Address

   If **Automatically** is selected, select **BOOTP** or **DHCP**.

   Notes:
   - If **BOOTP** or **DHCP** mode is selected, you cannot change the **IP Address**, **Network Mask**, or **Router/Gateway Address**. Select **Auto IP** if required.
   - New settings will not be applied until the machine is rebooted. Changing the machine's **TCP/IP** setting may cause you to lose your connection to the machine.
8. In the **Domain Name** area:
   a. Enter a domain name in the **Domain Name** field.
   b. Enter an IP address in the **Primary DNS Server** and **Secondary DNS Server** fields.

c. Select the **Enable** check box to enable **Dynamic DNS Registration** if required.

Note: If your DNS Server does not support dynamic updates there is no need to select **Enabled**.

9. In the **WINS** area, select the check box to enable **WINS** and enter details in the following fields:
   a. Primary WINS Server
   b. Secondary WINS Server
10. Select **Apply** to save the changes.
11. Select **OK** when the acknowledgement message displays.

IPv6

1. At your workstation, open the Web browser and enter the IP Address of the machine in the Address Bar.
2. Press **Enter**.
3. Select **Properties**.
4. If prompted, enter the Administrator User Name (**admin**) and Password (**1111**), and select **Login.**. Select **Properties.**
5. In **Network Settings** select **TCP/IPv6** from the directory tree.
6. Select the **Enable** check box to enable IPv6 protocol and select **OK**.
7. To set a manual address, select **Enable Manual Address** and enter the address and prefix in the **Address/Prefix** area. Information in the **Assigned IPv6 Addresses** box is automatically populated.
8. The machine performs auto-address DHCPv6 configuration every time it powers up. This is used for neighbor discovery and address resolution on the local IPv6 subnet. However, you can choose to use manual configuration, automatic configuration or a combination of automatic and manual configuration.

   In the **Dynamic Host Configuration Protocol Version 6 (DHCPv6)** area, select one of the following options:
   - **Use DHCP as directed by a router** - this option is fully automatic. The DHCPv6 Address will be obtained and displayed on the screen.
   - **Always Enable DHCP** - this option is fully automatic. The DHCPv6 Address will be obtained and displayed on the screen.
   - **Never use DHCP** - when this option is selected, you must configure the Manual Address Options and DNS separately.
9. In the **Domain Name System Version 6 (DNSv6)** area:
   a. Enter valid details in the **IPv6 Domain Name** field.
   b. Enter an IP addresses for the **Primary DNSv6 Server Address** and **Secondary DNSv6 Server Address**.
   c. Check the **Dynamic DNSv6 Registration** check box to enable this option.

   Note: If your DNS Server does not support dynamic updates there is no need to enable DDNS.
10. Select **Apply** to save the changes.

11. Select **OK** when the acknowledgement message displays.

    Note: Enabling or disabling the TCP/IPv6 protocol will take effect after the system is rebooted. Enabling or disabling TCP/IPv6 will impact other protocols, for example LPR/LPD, SNMP, Raw TCP/IP Printing and DHCPv6 over TCP/IPv6.

Test Access

1. At your workstation, open the Web browser and enter the TCP/IP Address of the machine in the Address bar. Press **Enter**.

   If you use the domain name to specify the machine, use the following format.

   http://myhost.example.com

   If you use the IP address to specify the machine, use one of the following formats depending on your machine configuration. An IPv6 address needs to be enclosed in square brackets.

   IPv4: http://xxx.xxx.xxx.xxx

   IPv6: http://[xxxx:xxxx:xxxx:xxxx:xxxx:xxxx:xxxx:xxxx]

   Note: If you have changed the port number from the default port number “80”, append the number to the Internet address as follows. In the following examples, the port number is 8080.

   Domain name: http://myhost.example.com:8080

   IPv4: http://xxx.xxx.xxx.xxx:8080

   IPv6: http://[xxxx:xxxx:xxxx:xxxx:xxxx:xxxx:xxxx:xxxx]:8080
2. Verify that the home page of CentreWare Internet Services displays.

The CentreWare Internet Services installation process is complete.

Note: When your access to CentreWare Internet Services is encrypted, enter **https://** followed by the Internet address, instead of **http://**.

Printer Drivers

This section explains how to install the printer drivers on your computer and covers the following topics:

Overview

The software and documentation CD is supplied with your machine. The CD includes the printer drivers for a variety of connectivity setups, covering a wide range of operating systems.

The machine supports the following operating systems:

Platform	Operating Systems
Windows®	Windows 7 & 8 (32/64 bit) Windows Vista (32/64 bit) Windows XP (32/64 bit) Windows 2003 Server (32/64 bit) Windows 2008 Server (32/64 bit) Windows 2008R2 (64 bit)
Macintosh®	Macintosh OS 10.5 - 10.9
Linux	Ubuntu 10.04, 10.10, 11.04, 11.10, 12.04, 12.10, 13.04 Red Hat Enterprise Linux 5, 6 Fedora 11 -19 Debian 5.0, 6.0, 7.0, 7.1 Mint 13, 14, 15 SUSE Linux Enterprise Desktop 10, 11 openSUSE 11.0, 11.1, 11.2, 11.3, 11.4, 12.1, 12.2, 12.3

Windows Drivers

A printer driver is software that allows your computer to communicate with your printer to enable printing. You can access the printer from your computer by installing the appropriate printer driver in your computer.

The procedure to install drivers may differ depending on the operating system you are using. All applications should be closed on your PC before beginning installation.

To access the many printer drivers which can be used with your machine, refer to the drivers CD or download the latest versions of printer drivers from the Xerox website at www.xerox.com.

Installing Windows Drivers

The following provides an overview of the print procedure and features available when printing using Windows.

Install Printer Software

You can install the printer software for local printing and network printing. To install the printer software on the computer, perform the appropriate installation procedure depending on the printer in use.

Note: All applications should be closed on your PC before beginning installation.

You can install the printer software for a local or wireless printer using the recommended or custom method.

Local Printer

A local printer is a printer directly attached to your computer using a printer cable, such as a USB cable.

Note: If the New Hardware Wizard window appears during the installation procedure, select **Close** or **Cancel**.

1. Make sure that the printer is connected to your computer and powered on.
2. Insert the supplied CD-ROM into your CD-ROM drive. The CD-ROM should automatically run, and an installation window displays.

   If the installation window does not appear, select **Start** and **Run**. Type **X:\Setup.exe**, replacing “X” with the letter which represents your drive and select **OK**.

   If you use Windows Vista, select **Start** > **All programs** > **Accessories** > **Run**, and type **X:\Setup.exe**. If the AutoPlay window appears in Windows Vista, select **Run Setup.exe** in the **Install or run program** field, and select **Continue** in the User Account Control window.
3. Select **Install Software**. A Printer Connection Type window displays.
4. Select **USB connection**. The Select Software to Install window displays.
5. Leave the default selections and select **Next**. The Installing Software window displays.
6. After the installation is finished, the Setup Completed window displays.

7. Select **Print a test page** and select **Finish**.

If your printer is connected to the computer, a Test Print page prints. If the Test Print operation is successful, refer to the Print chapter of this guide. If the print operation failed, refer to the Troubleshooting chapter of this guide.

Custom Installation

With the custom installation, you can choose individual components to install.

1. Make sure that the printer is connected to your computer and powered on.
2. Insert the supplied CD-ROM into your CD-ROM drive.

   The CD-ROM should automatically run, and an installation window appears. If the installation window does not appear, select **Start** and **Run**. Type **X:\Setup.exe**, replacing "X" with the letter which represents your drive and select **OK**.

   If you use Windows Vista, select **Start** > **All Programs** > **Accessories** > **Run**, and type **X:\Setup.exe**.

   Note: If the AutoPlay window appears in Windows Vista, select **Run Setup.exe** in the **Install or run program** field, and select **Continue** in the User Account Control window.
3. Select **Install Software**. A Printer Connection Type window displays.
4. Select your connection type and select **Next**. The Select Software to Install window displays.
5. Select **Custom** from the Setup type dropdown box.
6. Select the components to be installed and select **Next**.

   Note: When you select an option, a description of that option displays at the bottom of the screen.
7. Select **Advanced Options** if you would like to do any of the following:
   - Change the printer name
   - Change the default printer
   - Share the printer with other users on the network
   - Change the destination path where driver files and user guide files will be copied to. Click **Browse** to change the path.
8. Select **OK** to continue, then select **Next**. The Copying Files window displays followed by the Installing Software window.
9. After the installation is finished, the Setup Completed window displays.
10. Select **Print a test page** and select **Finish**.

If your printer is connected to the computer, a Test Print pageprints. If the Test Print operation is successful, continue on to the Print chapter of this guide. If the print operation failed, refer to the Troubleshooting chapter.

Wireless Printer

Follow the steps below to install Windows drivers for wireless printing.

1. Make sure that the printer is connected to your computer with a USB cable and powered on.
2. Insert the supplied CD-ROM into your CD-ROM drive. The CD-ROM should automatically run, and an installation window appears.

   If the installation window does not appear, select **Start** and **Run**. Type **X:\Setup.exe**, replacing “X” with the letter which represents your drive and select **OK**.

   If you use Windows Vista, select **Start** > **All programs** > **Accessories** > **Run**, and type **X:\Setup.exe**. If the AutoPlay window appears in Windows Vista, select **Run Setup.exe** in **Install or run program** field, and select **Continue** in the User Account Control window.

3. Select **Install Software**. A Printer Connection Type window displays.
4. Select **Wireless network connection**.
5. When asked if you are setting up the printer for the first time, select **Yes, I will set up my printer's wireless network** and click **Next**.
6. Select your wireless network from the list and click **Next**.
7. Enter or confirm the **Network Key**.
8. Click **Next**. The Select Software to Install window displays.
9. After the installation is finished, select **Print a test page** and select **Finish**.

If your printer is connected to the computer, a Test Print page prints. If the Test Print operation is successful, refer to the Print chapter of this guide. If the print operation failed, refer to the Troubleshooting chapter of this guide.

Wireless Setting Program

When installing the Phaser 3020BI, you can use the **Xerox Easy Wireless Setup** program that was automatically installed with the printer driver to configure the wireless settings.

To open the program:

1. Select **Start** > **Programs** or **All Programs** > **Xerox Printers** > **Xerox Phaser 3020** > **Xerox Easy Wireless Setup**.
2. Connect the machine to your computer using the USB cable.

   Note: During installation, the printer needs to be temporarily connected using the USB cable.
3. Select **Next.**
4. Once the machine is connected to the computer with the USB cable, the program searches for WLAN data.
5. When the search is complete, the Select Wireless Network window displays. Select your network from the list.
6. Click **Advanced Setting** to set the Wireless Network Settings.
7. Click **Next**. The Wireless Network Security screen displays.
8. Enter your **Network Password** and click **Next**.
9. Click **Finish** when the setup is complete.

Configuring Wi-Fi Direct™ using CentreWare Internet Services

Wi-Fi Direct™ allows you to enable your wireless devices, such as notebooks, mobile phones, and PCs, to establish wireless connectivity without the need for a wireless router, access point, or Wi-Fi hot spots.

1. At your workstation, open the Web browser and enter the IP Address of the machine in the Address Bar.
2. Press **Enter**.
3. Select **Properties**.
4. If prompted, enter the Administrator User Name (**admin**) and Password (**1111**), and select **Login.**. Select **Properties.**
5. In the **Network Settings** link, select the **Wi-Fi** link. Then select the **Wi-Fi Direct™** link below that.
6. Select **On** for **Wi-Fi Direct™**.
7. Enter the following:
   - Device Name
   - IP Address
   - Activate or Deactivate the Group Owner
   - Network Key
8. Select **Apply** and then **OK**.

Uninstalling a Windows Driver

Follow the steps below to uninstall the driver.

1. Make sure that the machine is connected to your computer and powered on.
2. From the **Start** menu, select **Programs** or **All Programs** > **Xerox Printers** > **Uninstall Xerox Printer Software.** The Uninstall Xerox Printer Software window displays.
3. Click **Next**. The Select Software window displays.
4. Select the components you want to remove and then select **Next** and then **Yes** to confirm.
5. When your computer asks you to confirm your selection, select **Yes**. The Uninstallation window displays.
6. After the software is removed, select **Finish**.

If you want to reinstall the driver over the currently installed driver via the provided software and documentation CD, insert the CD; the window with an **overwriting confirmation** message appears. Simply confirm it to proceed to the next step. Next steps are same as the first installation you performed.

Macintosh Drivers

The Software and Documentation CD that came with your machine provides you with the Driver files that allow you to use the CUPS driver or PostScript driver (only available when you use a machine which supports the PostScript driver) for printing on a Macintosh computer.

A TWAIN driver is also provided for scanning on a Macintosh computer.

Information Checklist

Before starting ensure that the machine is connected to your computer and powered on.

Procedure

These steps were performed using Macintosh version 10.8.5. Instructions may vary depending on your operating system version.

1. Insert the supplied Software and Documentation CD into your CD-ROM drive.
2. Select the **CD-ROM** icon that appears on your Macintosh desktop.
3. Select the **MAC_Installer** folder.
4. Select the **Installer** icon.
5. The **Install** window opens. Select **Continue**.
6. Select **Install**.
   Standard Install is the default and is recommended for most users. All components necessary for machine operations are installed.
   If you select **Customize**, you can choose individual components to install.
7. Enter your password and select **Install Software**.
8. Select how the printer will be connected to your computer. Choices are:
   - USB Connected Printer
   - Configuration of Wireless Network
9. Select **Continue**.
10. Select **Add Printer** and click **Continue** and follow the instructions on the installation wizard.
11. Select the options you want to add, such as Fax.
12. Select the **Add Easy Printer Manager to Dock** option if required.
13. After the installation is complete, select **Close**.
14. Select **Applications** > **System Preferences** > **Print & Scan**.
15. Select the **+** sign on the Printer list and select the printer or enter the IP Address for the printer.
16. Select **Add**.

Uninstalling a Macintosh Driver

If the printer driver does not work properly, uninstall the driver and reinstall it. Follow the steps below to uninstall the driver for Macintosh.

1. Make sure that the machine is connected to your computer and powered on.
2. Click the **Applications** folder.
3. Click the **Xerox** folder.
4. Click **Printer Software Uninstaller**.
5. Select the programs you want to uninstall and click **Uninstall**.
6. Enter your password.
7. Select **Close**.

Linux Drivers

You need to download the Linux software package from the Xerox Web site to install the printer software.

Procedure for Installing the Linux Unified Driver

1. Make sure that the machine is connected to your computer and powered on.

   You must log in as a super user (root) to install the machine software. If you are not a super user, ask your system administrator.
2. When the **Administrator Login** window appears, type **root** in the **Login** field and enter the system password.
3. From the Xerox Web site, download the **Unified Linux Driver** package to your computer.
4. Select the **Unified Linux Driver** package and extract the package.
5. Select **cdroot** > **autorun**.
6. When the **Welcome** screen appears, select **Next**.
7. When the installation is complete, select **Finish**.

The installation program has added the Unified Driver Configuration desktop icon and the Unified Driver group to the system menu for your convenience. If you have any difficulties, consult the on-screen help that is available through your system menu or from the driver package, such as **Unified Driver Configurator** or **Image Manager**.

Sharing Your Machine Locally

If a host computer is directly connected to the machine with a USB cable and is also connected to the local network environment, the client computer connected to the local network can use the shared machine through the host computer to print.

Follow the steps below to set up the computers to share your machine locally.

Windows

Host Computer Setup

1. Install your printer driver. Refer to Installing Windows Drivers.
2. Depending on your operating system, navigate to the **Printers**, **Printers and Faxes**, or **Devices and Printers** settings from the Windows **Start** Menu or through the control panel:
3. Select your printer icon and select **Printer Properties**.

   Note If the **Printer properties** item has a **?**, you can select other printer drivers connected with the selected printer.
4. Select the **Sharing** tab.
5. Check the **Change Sharing Options** check box.
6. Check the **Share this printer** check box.
7. Enter details in the **Share Name** field.
8. Select **OK** or **Next**.

Client Computer Setup

1. Install your printer driver. Refer to Installing Windows Drivers.
2. From the Windows **Start** menu, select **All Programs** > **Accessories** > **Windows Explorer**.
3. Enter the **IP address** of the host computer and press **Enter**.
4. If the host computer requires a User name and Password, enter details in the **User ID** and **password** field of the host computer account.
5. Select the printer icon you want to share and select **Connect**.
   If a set up complete message appears, select **OK**.
6. Open the file you want to print and start printing.

Macintosh

The following steps are for Macintosh OS X 10.8.5. Refer to Macintosh Help for other OS versions.

Host Computer Setup

1. Install your printer driver. Refer to Installing a Macintosh Driver.
2. Open the **Applications** folder, select **System Preferences** and select **Print & Fax** or **Print & Scan**.
3. Select the printer to share in the Printers list.
4. Select **Share this printer**.

Client Computer Setup

1. Install your printer driver. Refer to Installing a Macintosh Driver.
2. Open the **Applications** folder, select **System Preferences** and select **Print & Fax** or **Print & Scan**.
3. Select **Add** or the **+** symbol.
   A display window showing the name of your shared printer displays.
4. Select your machine and select **Add**.

Windows Printing

LPR Printing

Install Printer Driver

1. From the Windows **Start** menu, navigate to your **Devices and Printers** or **Printers** settings.
2. Select **Add a Printer**.
3. Select the Local Printer option.

   Depending on your operating system, if already selected, select **Automatically detect and install my Plug and Play printer** to deselect it.
4. Select the local printer and click **Next**.
5. Select **Create a new port**.
6. Select the **LPR** option from the **Type of Port** pull down menu:
7. Select the **Next** button.
8. Enter the IP Address of the printer.
9. Enter a name for the printer.
10. Select the **OK** button.
11. You will be prompted for a Printer Driver. Select **Have Disk**.
12. Select the **Browse** button.
13. Select the required Printer Driver file **.inf**.
14. Select the **Open** button.
15. Select the **OK** button.
16. Select the printer model from the list.
17. Select the **Next** button.
18. The **Name your Printer** screen appears.
19. Enter details in the **Printer name** field.
20. Select the **Next** button. The **Printer Sharing** screen appears.
21. Select the **Do not share** or **Share** option and enter the name, location, and comment, if required.
22. Select the **Next** button.
23. Select **Set as the default printer** if required.
24. Select **Print Test Page** to print a test page.
25. Select the **Finish** button. The printer driver installs.
26. Verify that the test page is printed at the machine.

Internet Printing Protocol (IPP) Port

The Internet Printing Protocol (IPP) defines a standard protocol for printing as well as managing print jobs, media size, resolution, and so forth. IPP can be used locally or over the Internet, and also supports access control, authentication, and encryption, making it a much more capable and secure printing solution than older ones.

Note IPP Printing is enabled by default.

How to Enable the IPP Port

1. At your workstation, open the Web browser and enter the IP Address of the machine in the Address Bar.
2. Select **Properties.**
3. If prompted, enter the Administrator User Name (**admin**) and Password (**1111**), and select **Login..** Select **Properties.**
4. In **Network Settings,** select **Raw TCP/IP**, **LPR**, **IPP** in the directory tree.
5. In the **Internet Printing Protocol (IPP)** area:
   a. For **IPP Protocol**, select **Enable** from the drop-down menu. The **Printer URI** displays the http:// IP address of the machine and the ipp:// IP address of the machine. Enter the required printer name in the **Printer Name** area.
   b. Select the **Advanced** button. Enter the required information for **IPP Attribute**.

Install Printer Driver

1. Follow the steps below that are specific to your operating system:

   Windows 2003

   From your workstation:

   a. Select the **My Network Places** icon.
   b. Select **Properties**.

   Windows 7

   From your workstation:

   a. Select **Control Panel**.
   b. Select **Network and Internet**.
   c. Select **Network and Sharing Center**.
   d. Select **Change adapter settings**.

   Windows 2008

   From your workstation:

   a. Select **Start**, select **Control Panel**.
   b. Select **Printers**.
   c. Select **File**, select **Run as administrator**. Go to step 6.
2. Select the **Local Area Connection** icon.
3. Select **Properties**.
4. Ensure that the Internet Protocol (TCP/IP) protocol has been loaded and ensure the checkbox is checked. Select **OK**.

5. For:
   - Windows 2003 - select **Settings** then **Printers**.
   - Windows Vista - select **Add a Local Printer**.
   - Windows 7 - select **Start**, select **Control Panel**, select **Hardware and Sound**, then **Devices and Printers**.
6. Select **Add a Printer** in the far left column.
   For Windows 7 select **Add a network, wireless or Bluetooth printer**.
7. The **Add Printer Wizard** window will appear. Select the **Next** button.
8. Select **The Printer that I want isn't listed.**
9. Select a shared printer by name.
10. Type HTTP:// followed by the printer's fully qualified Domain name or IP Address in the URL field. The Printer Name can be either the Host Name or the SMB Host Name as shown on the machine Configuration Report, depending on the name resolution used by your network (WINS or DNS).
11. Select the **Next** button.
12. Select the **Have Disk** button and browse to the location of the printer driver and select the OK button.
13. Select the **Printer Model** and Select the **OK** button.
14. Select **Yes** if you wish to make this the default printer.
15. Select **Next**.
16. Select **Finish**.

Raw TCP/IP Printing (Port 9100)

Raw TCP/IP is a printing protocol that is similar to LPR printing. Also known as a direct TCP/IP connection or sockets interface, it sends information directly to the machine and does not require a Line Printer Daemon (LPD). The advantages are that connections stay open for multiple print files and spooling is not needed, therefore, printing is faster and more reliable than LPD printing. Raw TCP/IP printing is contained in Windows and other third-party applications and operating systems.

Note Raw TCP/IP Printing is enabled by default for port 9100.

How to Configure Port 9100

1. At your workstation, open the Web browser and enter the IP Address of the machine in the Address Bar.
2. Select **Properties**.
3. If prompted, enter **admin** for the ID and **1111** for the Password, and select **Login**. Select **Properties.**
4. In **Network Settings,** select **Raw TCP/IP, LPR, IPP** in the directory tree.

5. In the **Raw TCP/IP Printing** area:
   a. Select **Enable**.
   b. For **Port Number**, enter the required port number (1 - 65535).
6. Select **Apply** to save the changes or **Undo** to return the settings to their previous values.

   Note The settings are not applied until you restart the machine.

Install Printer Driver

Refer to Windows Drivers.

Configure the Windows Printer Driver

Manual Printer Driver Configuration

To configure the printer driver without using bidirectional communication:

Follow the steps below:

1. Select the Windows **Start** menu.
2. Depending on your Operating System, navigate to the **Printers** or **Devices and Printers** setting.
3. Select the **printer icon** and then select **Printing preferences**.
4. Select each tab and change any default printer settings as required.
5. Select **Apply**.
6. Select **OK**.

Bi-Directional Support

Follow the steps below that are specific to your operating system:

1. Select the Windows **Start** menu.
2. Depending on your Operating System, navigate to the **Printers** or **Devices and Printers** setting.
3. Select the **printer icon** and then select **Printer properties**.
4. Select the **Ports** tab.
5. Check the **Enable bidirectional support** check box.

   Bi-directional communication automatically updates the printer driver with the printer's installed options. The driver’s Printing Preferences will report information about the printer's operational status, active jobs, completed jobs and paper status.
6. Select **OK**.

AirPrint

AirPrint is a software feature that allows for driverless printing from Apple iOS-based mobile devices and Macintosh OS-based devices. AirPrint-enabled printers let you print directly from a Macintosh or from an iPhone, iPad, or iPod touch.

Notes:

- Not all applications support AirPrint.
- Wireless devices must join the same wireless network as the printer.
- For AirPrint to function, both IPP and Bonjour (mDNS) protocols must be enabled.
- The device that submits the AirPrint job must be on the same subnet as the printer. To allow devices to print from different subnets, configure your network to pass multicast DNS traffic across subnets.
- AirPrint-enabled printers work with iPad (all models), iPhone (3GS or later), and iPod touch (3rd generation or later), running the latest version of iOS.
- The Macintosh OS device must be Macintosh OS 10.7 or later.

1. Open a Web browser, type the IP address of the printer, then press **Enter** or **Return**.
2. Click **Login** and enter the **ID** (admin) and **Password** (1111).
3. Click **Properties** > **Network Settings** > **AirPrint**.
4. To enable AirPrint, click **Enable**.

   Note: AirPrint is enabled by default when IPP and Bonjour (mDNS) are both enabled. Enable these settings by selecting **Properties** > **Network Settings** > **Raw TCP/IP, LPR, IPP** and **Properties** > **Network Settings** > **mDNS**.

5. To change the printer name, in the **Friendly Name** field, enter a new name.
6. To enter a location for the printer, in the **Location** field, enter the location of the printer
7. To enter a physical location for the printer, in the Geographical Location field, enter the geographic **Latitude** and **Longitude** coordinates in decimal form. For example, use coordinates like +170.1234567 and +70.1234567 for a location.
8. Click **Apply**.
9. For the new settings to take effect, restart your printer.

Google Cloud Print

Google Cloud Print is a service that allows you to print to a printer using your smart phone, tablet, or any other Web-connected devices. Just register your Google account with the printer, and you are ready to use the Google Cloud Print service. You can print your document or e-mail with Chrome OS, Chrome browser, or a Gmail™/ Google Docs™ application on your mobile device, so you do not need to install the printer driver on the mobile device. Refer to the Google Web site at http://www.google.com/cloudprint/learn/ or http://support.google.com/cloudprint for more information about Google Cloud Print.

Notes:

- Make sure the printer is turned on and connected to a wired or wireless network that has access to the Internet.
- Depending on your security configuration, your firewall might not support Google Cloud Print.
- Set up a Google e-mail account.
- Configure the printer to use IPv4.
- Configure Proxy Server settings as needed.

1. Open a Web browser, type the IP address of the printer, then press **Enter** or **Return**.
2. Click **Login** and enter the **ID** (admin) and **Password** (1111).
3. Click **Properties** > **Network Settings** > **Google Cloud Print**.
4. To change the printer name, enter a new name in the **Printer Name** field.
5. If you need to enable a proxy server, select **Proxy Setting** and enter your proxy informaion.
6. Select **Test Connection** to ensure your connection with the printer is successful.
7. Click **Register** to register the device to Google Cloud Print.

   Note: If the **Claim Url** link does not display when you click **Register**, refresh the CentreWare Internet Services page and click **Register**.

8. Click the **Claim Url** that displays. This takes you to the Google cloud print Web site to finish the registration.
9. Click **Finish printer registration**.
10. Now your printer is registered with Google Cloud Print. Click **Manage your printer**. Google Cloud Print - ready devices display in the list.

Paper and Media

3

This chapter contains information about the different types of stock and stock sizes that can be used on your machine, available paper trays, and the types of stock and sizes supported by each tray.

This chapter includes:

- Loading Paper
- Setting Paper Size and Type
- Media Specifications
- Media Output Locations

Loading Paper

Tray 1 is standard on your machine.

Various media sizes and types can be used in the tray. For more media specifications, refer to Media Specifications.

Preparing Paper for Loading

Before loading paper into the tray, flex or fan the edges of the paper stack. This procedure separates any sheets of paper that are stuck together and reduces the possibility of paper jams.

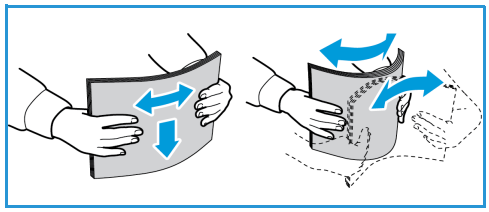

Note: To avoid unnecessary paper jams and misfeeds do not remove paper from its packaging until required.

Using Tray 1

Tray 1 is located on the front of your machine. It can be closed when not in use, making the product more compact. Use the tray to print on standard media as well as transparencies, labels, envelopes or postcards.

Use the manual mode for all special media.

Acceptable print media is plain paper from 3.0 x 5.0 inches to 8.5 x 14 inches Legal (76 mm x 127 mm to 216 mm x 356 mm) and weighing between 16 lb and 43 lb (60 g/m² and 163 g/m²).

Loading Tray 1

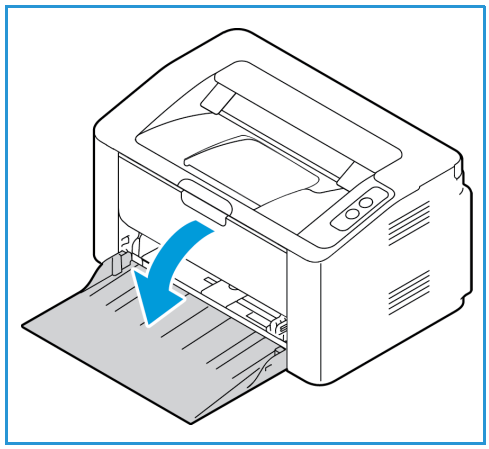

1. Lower tray 1, located on the front of the machine.
2. Prepare a stack of paper for loading by flexing or fanning it back and forth. Straighten the edges on a level surface. Remove any curl on postcards, envelopes and labels before loading them into the tray.

   Note: In the automatic mode, the tray holds a maximum of 150 sheets of 20 lb (80 g/m²) bond paper, 1 transparency sheet, or 1 envelope. In Manual Feeder mode, selected on the Paper tab in the print driver, the tray holds 1 sheet of all media types. Use of the Manual Feeder mode for special media is strongly recommended.
3. Load the print material between the width guides with the print side facing up.

   Note: Hold a transparency by the edge and avoid touching the print side.

4. Adjust the paper guide to the width of the stack of print material. Push to move the guide toward the center of the tray; squeeze to disengage the guide and move it to the outer edge of the tray. Ensure you have not loaded too much print media.
5. After loading paper in the paper tray, ensure you select the **Paper** tab in the print driver to specify the correct paper size and type. Not confirming the paper details may result in printing delays.

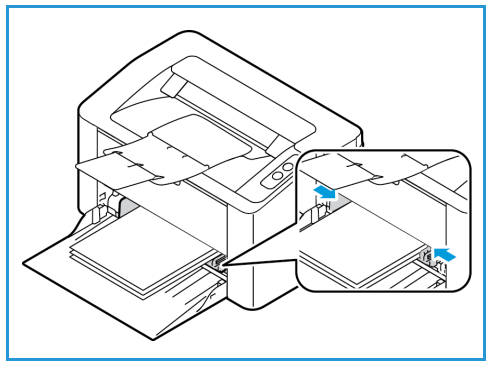

Envelope Mode

1. Remove any curl on the envelope before loading it into the tray.

   Notes:

   - One envelope can be loaded. When printing envelopes and other special media, **Manual Feeder** must be selected as the source in the print driver **Paper** tab.
   - For more information on media specifications, refer to Media Specifications.
2. Load the envelope short edge feed and with the flap facing down as shown in the illustration.
3. Adjust the paper guide to the width of the print material.
4. After loading the media, ensure you select the **Paper** tab in the print driver to specify the correct paper size and type. For the source, you must select Manual Feeder. Not confirming the paper details may result in printing delays.

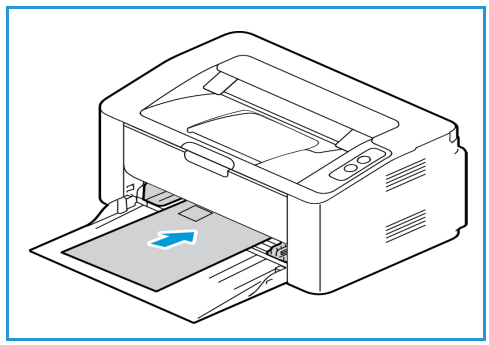

Setting Paper Size and Type

For computer printing, select the paper size and type in the application program you use on your computer.

Alternatively, to change the paper size and type on your computer, select **Xerox Easy Printer Manager > (Switch to advanced mode) > Device Settings.**

Media Specifications

Media Guidelines

When selecting or loading paper, envelopes, or other special media please adhere to these guidelines:

- Attempting to print on damp, curled, wrinkled, or torn paper can cause paper jams and poor print quality.
- Use only high quality copier grade paper. Avoid paper with embossed lettering, perforations, or texture that is too smooth or too rough.
- Store paper in its ream wrapper until ready to use. Place cartons on pallets or shelves, not on the floor. Do not place heavy objects on top of the paper, whether it is packaged or unpackaged. Keep it away from moisture or other conditions that can cause it to wrinkle or curl.
- During storage, moisture-proof wrap (any plastic container or bag) should be used to prevent dust and moisture from contaminating your paper.
- Always use paper and other media that conforms to the specifications.
- Use only well-constructed envelopes with sharp, well creased folds:
  - DO NOT use envelopes with clasps and snaps.
  - DO NOT use envelopes with windows, coated lining, self-adhesive seals, or other synthetic materials.
  - DO NOT use damaged or poorly made envelopes.
- Only use the special media recommended for use in laser printers.
- To prevent special media such as transparencies and label sheets from sticking together, remove them from the exit tray as they are printed.
- Place transparencies on a flat surface after removing them from the machine.
- Do not leave the special media in the tray for long periods of time. Dust and dirt may accumulate on them resulting in spotty printing.
- To avoid smudging caused by fingerprints, handle transparencies and coated paper carefully.
- To avoid fading, do not expose the printed transparencies to prolonged sunlight.
- Store unused media at temperatures between 59˚F and 86˚F (15˚C to 30˚C). The relative humidity should be between 10 % and 70 %.
- When loading paper, do not fill above the Maximum Fill line indicated by the symbol ▽▽▽ .
- Verify that your labels' adhesive material can tolerate fusing temperature of 200°C (392°F) for 0.1 second.
- Ensure that there is no exposed adhesive material between labels.

CAUTION: Exposed areas can cause labels to peel off during printing, which can cause paper jams. Exposed adhesive can also cause damage to machine components.

- Do not feed a sheet of labels through the machine more than once. The adhesive backing is designed for one pass only through the machine.
- Do not use labels that are separating from the backing sheet or are wrinkled, bubbled, or otherwise damaged.

Media Types

Note: Some features may not be available on your model. Check your machine type in Getting Started.

The table below shows the media types supported for Print for each tray for the following paper sizes:

- A4 8.27 x 11.69 inches (210 x 297 mm)
- Letter 8.5 x 11.0 inches (216 x 279 mm)
- Legal 8.5 x 14.0 inches (216 x 355 mm)
- Oficio 8.5 x 13.5 inches (216 x 343 mm)
- Folio 8.5 x 13.0 inches (216 x 330 mm)

Key:

O Supported **X** Not Supported

Types	Supported Weights	Tray 1 Automatic Feed	Tray 1 Manual Feed
Plain	19 to 24 lb (70 to 90 g/m²)	O	O
Thick	24 to 28 lb (91 to 105 g/m²)	O	O
Thin	16 to 18 lb (60 to 70 g/m²)	O	O
Cotton	20 to 24 lb (75 to 90 g/m²)	X	O
Colored	20 to 24 lb (75 to 90 g/m²)	X	O
Preprinted	20 to 24 lb (75 to 90 g/m²)	X	O
Recycled	19 to 24 lb (70 to 90 g/m²)	O	O
Transparency (A4 / Letter only)	37 to 39 lb (138 to 146 g/m²)	X	O
Labels	32 to 40 lb (120 to 150 g/m²)	X	O
Card Stock	32 to 43 lb (121 to 163 g/m²)	O	O
Bond	28 to 32 lb (105 to 120 g/m²)	X	O
Archival	28 to 32 lb (105 to 120 g/m²) if you need to keep the print-out for a long period time, such as archives, select this option	O	O

The table below shows the media types supported for Print for each tray for the following paper sizes:

- JIS B5 7.17 x 10.12 inches (182 x 257 mm)
- ISO B5 6.93 x 9.84 inches (176 x 250 mm)
- Executive 7.25 x 10.50 inches (184.2 x 266.7 mm)
- A5 5.85 x 8.27 inches (148.5 x 210 mm)
- A6 4.13 x 5.85 inches (105 x 148.5 mm)
- Postcard 4 x 6 inches (101.6 x 152.4 mm)
- Monarch Envelopes 3.88 x 7.5 inches (98.4 x 190.5 mm)
- DL Envelopes 4.33 x 8.66 inches (110 x 220 mm)
- C5 Envelopes 6.38 x 9.02 inches (162.0 x 229 mm)
- C6 Envelopes 4.49 x 6.38 inches (114 x 162 mm)
- No.10 Envelopes 4.12 x 9.5 inches (105 x 241 mm)

Key:

O Supported **X** Not Supported

Types	Supported Weights	Tray 1 Automatic Feed	Tray 1 Manual Feed
Plain	19 to 24 lb (70 to 90 g/m²)	O	O
Thick	24 to 28 lb (91 to 105 g/m²)	O	O
Thin	16 to 18 lb (60 to 70 g/m²)	O	O
Cotton	20 to 24 lb (75 to 90 g/m²)	X	O
Colored	20 to 24 lb (75 to 90 g/m²)	X	O
Preprinted	20 to 24 lb (75 to 90 g/m²)	X	O
Recycled	19 to 24 lb (70 to 90 g/m²)	O	O
Postcard	32 to 43 lb (121 to 163 g/m²) card stock	X	O
Envelopes	20 to 24 lb (75 to 90 g/m²)	X	O

Media Output Location

Output Tray

The machine has one output location:

- Output tray (face down) up to a maximum of 100 sheets of 20 lb (80 g/m²) paper, 10 transparencies, and 10 sheets of labels.

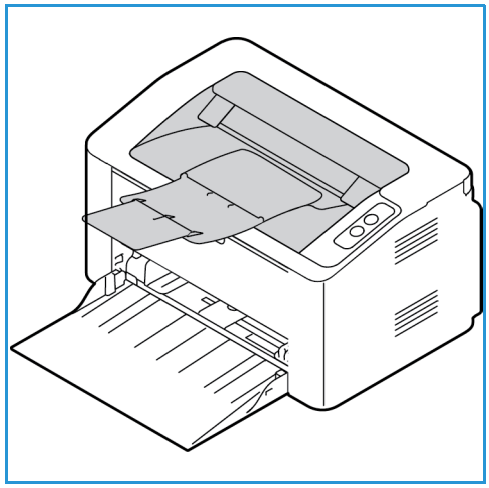

Using the Output Tray

The output tray collects printed paper face down, in the order in which the sheets were printed.

Print

4

This product produces high quality prints from electronic documents. You can access the printer from your computer by installing the appropriate printer driver. To access the many printer drivers which can be used with your machine, refer to the driver CD or download the latest versions from the Xerox Web site at www.xerox.com.

This chapter includes:

- Printing using Windows
- Xerox Easy Printer Manager (EPM)
- Printing using Macintosh
- Printing using Linux
- Printing using Unix

Printing using Windows

The following provides an overview of the print procedure and features available when printing using Windows.

Notes:

- Some options may be unavailable depending on your printer model and configuration.
- Images are representative only.

Print Procedure

Documents can be printed from your computer using the printer drivers supplied. The printer driver must be loaded on each PC which uses the machine for printing.

Note: When you select an option in Printing Properties or Preferences, you may see a warning mark or . A mark means you can select that certain option but it is not recommended, and a mark means you cannot select that option due to the machine setting or environment.

1. Select **Print** in your application.
2. From the **Printer: Name** drop- down menu, select your machine.
3. Select **Properties** or **Preferences** to make your print selections on the individual tabs. For more information refer to the following:
   - Favorites Tab
   - Basic Tab
   - Paper Tab
   - Graphics Tab
   - Advanced Tab
   - Xerox Tab
4. Select **OK** to confirm your selections.
5. Select **OK** to print your document.

Favorites Tab

The **Favorites** tab lists lists default favorites and user-generated favorites.

The Favorites option, which is visible on each tab except for the Xerox tab, allows you to save the current preferences for future use.

To save a Favorites item, follow these steps:

1. Change the settings as needed on each tab.
2. Click **Save**.
3. Enter a name and a description, and then select the desired icon.

4. Click **OK**. When you save Favorites, all current driver settings are saved.

To use a saved setting, select it in the Favorites tab. The machine is now set to print according to the settings you have selected.

To delete a saved setting, select it in the Favorites tab and click **Delete**.

Note: Only user-generated favorites can be deleted.

Preview Tab

The **Preview** tab, in the right panel, is visible only on the Favorites tab. It displays a graphical summary of your selections.

Details Tab

The **Details** tab, in the right panel, is visible only on the Favorites tab. It displays a summary of the selected Favorite and notes incompatioable options.

Paper Tab

The **Paper** tab, in the right panel, is visible on each main tab except for the Favorites and Xerox tabs. It displays a graphical summary of your selections.

Device Tab

The **Device** tab, in the right panel, is visible on each main tab except for the Favorites and Xerox tabs. It displays a summary of the device settings.

Printer Status

Note: The Printer Status window and its contents shown in this user guide may differ depending on the machine or operating system in use.

The **Printer Status** option, which is visible on each tab, monitors and informs you of the machine status. The Xerox Printer Status dialog includes the following options:

Toner Level

You can view the level of toner remaining in each toner cartridge. The machine and the number of toner cartridge(s) shown in the window may differ depending on the machine in use. Some machines do not have this feature.

Option

You can set printing job alert related settings.

Order Supplies

You can order replacement toner cartridge(s) from online.

User's Guide

This button opens the user guide when an error occurs. You can then open the troubleshooting section in the user guide.

Basic Tab

The **Basic** tab provides selections for the print mode to use and options to adjust how the document appears on the printed page. These options include orientation settings, quality settings, layout options, and 2-sided printing settings.

Note: Some options may be unavailable depending on your printer model and configuration.

Orientation

Orientation allows you to select the direction in which information is printed on a page.

- **Portrait:** Prints across the width of the page, letter style.
- **Landscape:** Prints across the length of the page, spreadsheet style.
- **Rotate 180 Degrees:** Allows you to rotate the page 180 degrees.

Layout Options

Layout Options allow you to select a different layout for your output. You can select the number of pages to print on a single sheet of paper. To print more than one page per sheet, the pages will be reduced in size and arranged in the order you specify.

- **Single Page Per Side:** Use this option if the layout does not require changing.
- **Multiple Pages Per Side:** Use this option to print multiple pages on each page. You can print up to 16 pages on one sheet. Select the number of images required on each side, the page order and if borders are required.
- **Poster Printing:** Use this option to divide a single-page document onto 4, 9 or 16 segments. Each segment will be printed on a single sheet of paper for the purpose of pasting the sheets together to form one poster-size document. Select **Poster 2x2** for 4 pages, **Poster 3x3** for 9 pages, or **Poster 4x4** for 16 pages. Then choose the overlap amount in mm or inches.
- **Booklet Printing:** This allows you to print your document on both sides of the paper and arrange the pages so that the paper can be folded in half after printing to produce a booklet.

Page Border: Use this option to select from a variety of borders for your output.

2-Sided Printing

You can print on both sides of a sheet of paper. Before printing, decide how you want your document oriented.

Note: Some features may not be available on your model.

- **Printer Default:** If you select this option, this feature is determined by the settings made on the control panel of the printer.
- **None:** The document is printed single-sided.
- **Long Edge:** This is the conventional layout used in book binding.
- **Short Edge:** This is the type often used with calendars.
- **Reverse 2-Sided Printing:** The document is printed two-sided and the second side images are rotated 180 degrees.

Paper Tab

Use the **Paper Tab** options to set the basic paper handling specifications when you access the printer properties.

Copies

This allows you to choose the number of copies to be printed. You can select 1 to 999 copies.

Paper Options

- **Original Size**: This allows you to set the size of the original you are printing. If the required size is not listed in the Size box, select **Edit**: When the Custom Paper Size Settings window appears, set the paper size and select OK. The setting appears in the list so that you can select it.
- **Output Size**: This allows you to set the size of paper required for printing.
- **Percentage:** Use this option to change the contents of a page to appear larger or smaller on the printed page. Enter the scaling rate in the **Percentage** input box.
- **Source:** Use this option to select the paper tray required. Use Manual Feeder when printing on special materials like envelopes and transparencies. If the paper source is set to **Auto Select**, the printer automatically selects the paper source based on the requested size.
- **Type:** Set **Type** to correspond to the paper loaded in the tray selected. This will provide the best quality printout. If printing **Envelopes**, ensure **Envelope** is selected.
- **Advanced:** The advanced paper options allow you to select a different paper source for the first page of your document.
    - **First Page:** To have the first page printed on a different paper type from the rest of the document select the paper tray containing the paper required.
    - **Source:** Use this option to select the paper tray required. Use Manual Feeder when printing on special materials like envelopes and transparencies. If the paper source is set to **Auto Select**: The printer automatically selects the paper source based on the requested size.

Graphics Tab

Use the following options to adjust the print quality for your specific printing needs.

Quality

This option allows you to select **Standard** or **High Resolution** graphics.

Font/Text

- **All Text Black:** Select this check box to have all text in your document print in solid black, regardless of the color it appears on the screen.
- **Advanced:** Use this option to set font options. True Type fonts can be downloaded as Outline or Bitmap Images or printed as Graphics. Select the **Use Printer Fonts** option if the fonts do not require downloading and the printer fonts should be used.

Graphic Controller

- **Advanced**: Use this option to adjust the brightness and contrast levels.

Toner Saver

- Select **On** to save toner.

Advanced Tab

You can select **Advanced** output options for your document, such as watermarks or overlay text.

Watermark

This option allows you to print text over an existing document. There are several predefined watermarks that come with the printer which can be modified, or you can add new ones to the list.

Using an Existing Watermark

Select the required watermark from the **Watermark** drop-down list. You will see the selected watermark in the preview image.

Creating a Watermark

1. Select **Edit** from the Watermark drop-down list. The **Edit Watermark** window appears.
2. Enter a text message in the Watermark Message box. You can enter up to 40 characters. The message displays in the preview window. When the **First Page Only** box is checked, the watermark prints on the first page only.
3. Select the watermark options. You can select the font name, style, size, or shade from the **Font Attributes** section and set the angle of the watermark from the **Message Angle** section.
4. Select **Add** to add the new watermark to the list.
5. When you have finished editing, select **OK**.

Editing a Watermark

1. Select **Edit** from the Watermark drop-down list. The **Edit Watermark** window appears.
2. Select the watermark you want to edit from the **Current Watermarks** list and change the watermark message options.
3. Select **Update** to save the changes.
4. When you have finished editing, select **OK**.

Deleting a Watermark

1. Select **Edit** from the Watermark drop-down list. The **Edit Watermark** window appears.
2. Select the watermark you want to delete from the **Current Watermarks** list and select **Delete**.
3. Select **OK**.

Overlay

An overlay is text and/or images stored on the computer hard disk drive as a special file format that can be printed on any document. Overlays are often used to take the place of preprinted forms and letterhead paper.

Note: This option is only available when you use the PCL6 Printer Driver.

Creating a New Page Overlay

To use a page overlay, you must first create one containing your logo or another image.

1. Create or open a document containing text or an image for use in a new page overlay. Position the items exactly as you want them to appear when printed as an overlay.
2. Select **Edit** from the Overlay drop-down list. The **Edit Overlay** window appears.
3. Select **Create** and type a name in the File name box. Select the destination path, if necessary.

4. Select **Save**. The name appears in the **Overlay List** box.
5. Select **OK**.

   Note: The overlay document size must be the same as the documents you print with the overlay. Do not create an overlay with a watermark.
6. Select **OK** on the **Advanced** tab page.
7. Select **OK** in the main **Print** window.
8. An Are you Sure? message displays. Select **Yes** to confirm.

Using a Page Overlay

1. Select the required overlay from the **Overlay** drop-down list box.

   If the overlay file you want does not appear in the overlay list, select the **Edit** button and **Load Overlay**, and select the **Overlay file**.

   If you have stored the overlay file you want to use in an external source, you can also load the file when you access the Load Overlay window.

   After you select the file, select **Open**. The file appears in the Overlay List box and is available for printing. Select the overlay from the Overlay List box.
2. If necessary, select **Confirm Page Overlay When Printing**. If this box is checked, a message window appears each time you submit a document for printing, asking you to confirm your wish to print an overlay on your document.

   If this box is not checked and an overlay has been selected, the overlay automatically prints with your document.
3. Select **OK**.

Deleting a Page Overlay

1. Select **Edit** from the Overlay drop-down list. The **Edit Overlay** window appears.
2. Select the Overlay you want to delete from the **Overlay List** box.
3. Select **Delete Overlay**. When a confirming message window appears, select **Yes**.
4. Select **OK**.

Output Options

Select the required Print order from the drop-down list box:

- **Normal:** All pages are printed.
- **Reverse All Pages:** Your printer prints all pages from the last page to the first page.
- **Print Odd Pages:** Your printer prints only the odd numbered pages of the document.
- **Print Even Pages:** Your printer prints only the even numbered pages of the document.

Select the **Skip Blank Pages** check box if you do not want blank pages to be printed.

To add a binding margin, select the **Manual Margin** check box and select **Details** to select the margin position and width.

Earth Smart

Earth Smart provides options to decrease the amount of energy and paper used in the printing process.

The default Earth Smart settings in CWIS are:

- N-Up: **2Up**
- Toner Save: **On**

Enabling Earth Smart Settings in CWIS

1. At your workstation, open the web browser and enter the IP Address of the machine in the Address Bar.
2. Press **Enter** on your keyboard.
3. Select **Login** at the top of the CentreWare Internet Services screen.
4. Enter the ID (admin) and Password (1111), and select **Login**.
5. Select **Earth Smart OFF** (or ON) at the top of the screen to access Earth Smart.
6. In the Earth Smart Mode dialog, select **On**.
7. Select **OK**.

Xerox Tab

This tab provides version and copyright information as well as links to drivers and downloads, supplies ordering, and the Xerox Web site.

Xerox Easy Printer Manager (EPM)

Xerox Easy Printer Manager is a Windows-based application that combines Xerox machine settings into one location. Xerox Easy Printer Manager conveniently combines device settings as well as printing/scanning environments, settings/actions, Scan to PC, and Fax to PC. All of these features provide a gateway to conveniently use Xerox devices.

Xerox Easy Printer Manager installs automatically during driver installation.

Printing Using Macintosh

This section explains how to print using a Macintosh. You need to set the print environment before printing. Refer to Installation and Setup.

Printing a Document

When you print with a Macintosh, you need to check the printer driver setting in each application you use. Follow the steps below to print from a Macintosh.

1. Open the document you want to print.
2. Open the **File** menu and select **Page Setup** (**Document Setup** in some applications).
3. Choose your paper size, orientation, scale, and other options. Make sure that your machine is selected and select **OK**.
4. Open the **File** menu and select **Print**.
5. Choose the number of copies you want and indicate which pages you want to print.
6. Select **Print**.

Changing Printer Settings

You can use advanced printing features provided by your machine.

Open an application and select **Print** from the **File** menu. The machine name which appears in the printer properties window may differ depending on the machine in use. Except for the name, the composition of the printer properties window is similar to the following.

Note: The setting options may differ depending on the printer and the Macintosh OS version.

TextEdit

This option allows you to print a header and footer.

Print Features

Set **Media Type** to correspond to the paper loaded in the tray from which you want to print. This will let you get the best quality printout. If you load a different type of print material, select the corresponding paper type.

Layout

The **Layout** option provides options to adjust how the document appears on the printed page. You can print multiple pages on one sheet of paper.

Two-Sided: Allows you to print a double -side document.

Reverse page orientation: Allows you to reverse the page orientation (rotate 180 degrees). For example, to print the top of a document on the left edge of the paper, select landscape orientation and select Reverse Page Orientation.

Paper Handling

This option allows you to to set these basic paper handling specifications: **Collate Pages**, **Pages to Print**, **Page Order**, **Scale to fit paper size**.

Cover Page

This option allows you to print a cover page before or after the document.

Supply Levels

This option shows the current toner level.

Graphics

This option allows you to select the printing resolution. The higher the setting, the sharper the clarity of printed characters and graphics. The higher setting also may increase the time it takes to print a document.

Printing Multiple Pages on One Sheet

You can print more than one page on a single sheet of paper. This feature provides a cost-effective way to print draft pages.

1. Open an application, and select **Print** from the **File** menu.
2. Select **Layout** from the drop-down list under **Pages**. In the **Pages per Sheet** drop-down list, select the number of pages you want to print on one sheet of paper.
3. Select the other options you want to use.
4. Select **Print**. The machine prints the selected number of pages you want to print on one sheet of paper.

Two Sided Printing

You can print on both sides of the paper.

1. From your Macintosh application, select **Print** from the **File** menu.
2. Select **Layout** from the drop-down list under **Orientation**.
3. Select **On** from the **Two Sided Printing** option:
4. Select the other options you want to use and select **Print**.

Using AirPrint

AirPrint is a software feature that allows for driverless printing from Apple iOS-based mobile devicesand Macintosh OS-based devices. AirPrint-enabled printers let you print directly from a Macintosh or from an iPhone, iPad, or iPod touch. For more information, refer to the topic AirPrint in Installation and Setup in this user guide.

Using Google Cloud Print

Google Cloud Print is a service that allows you to print to a printer using your smart phone, tablet, or any other web-connected devices. For more information, refer to the topic Google Cloud Print in Installation and Setup in this user guide.

Printing Using Linux

Printing from Applications

There are a lot of Linux applications that allow you to print using Common Unix Printing System (CUPS). You can print on your machine from any such application.

1. Open an application, and select **Print** from the **File** menu.
2. Select **Print** directly using lpr.
3. In the LPR GUI window, select the machine from the printer list and select **Properties**.
4. Change the print job properties using the following four tabs displayed at the top of the window.
   - **General**: This option allows you to change the paper size, the paper type, and the orientation of the documents. It enables the duplex feature, adds start and end banners, and changes the number of pages per sheet.
   - **Text**: This option allows you to specify the page margins and set the text options, such as spacing or columns.
   - **Graphics**: This option allows you to set image options that are used when printing image files, such as color options, image size, or image position.
   - **Advanced**: This option allows you to set the print resolution, paper source, and destination.
5. Select **Apply** to apply the changes and close the **Properties** window.
6. Select **OK** in the LPR GUI window to start printing.

   The Printing window appears, allowing you to monitor the status of your print job.

Printing Files

You can print many different file types on your machine using the standard CUPS utility, directly from the command line interface. However, the drivers package replaces the standard lpr tool with a much more user-friendly LPR GUI program.

To print any document file:

1. Type lpr <file_name> from the Linux shell command line and press **Enter**. The LPR GUI window appears.
2. When you type **only lpr** and press **Enter**, the **Select file(s) to print** window appears first. Select any files you want to print and select **Open**.
3. In the LPR GUI window, select your machine from the list, and change the print job properties.
4. Select **OK** to start printing.

Configuring Printer Properties

Using the Printer Properties window provided by the Printers configuration, you can change the various properties for your machine as a printer.

1. Open the **Unified Driver Configurator**.

   If necessary, switch to Printers configuration.
2. Select your machine on the available printers list and select **Properties**.

3. The **Printer Properties** window opens.

   The following five tabs display at the top of the window:

   - **General:** This option allows you to change the printer location and name. The name entered in this tab displays on the printer list in Printers configuration.
   - **Connection:** This option allows you to view or select another port. If you change the machine port from USB to parallel or vice versa while in use, you must re-configure the machine port in this tab.
   - **Driver:** This option allows you to view or select another machine driver. Selecting **Options** you to set the default device options.
   - **Jobs:** This option shows the list of Print jobs. Select **Cancel job** to cancel the selected job and select the **Show completed jobs** check box to see previous jobs on the job list.
   - **Classes:** This option shows the class that your machine is in. Select **Add to Class** to add your machine to a specific class or select **Remove from Class** to remove the machine from the selected class.

4. Select **OK** to apply the changes and close the Printer Properties window.

Printing Using Unix

Printing Files

After installing the printer, choose any of the images, text, PS to print.

1. Execute “printui <file_name_to_print>” command. For example, if you are printing “document1” use **printui document1** command.

   This will open the Unix printer driver Print Job Manager in which the user can select various print options.
2. Select a printer that has already been added.
3. Select the printing options from the window such as **Page Selection**.
4. Select how many copies are needed in **Number of Copies**.
5. Press **OK** to start the print job.

Configuring Printer Properties

The Unix printer driver Print Job Manager allows you to configure various print options using the printer **Properties** option. The following hot keys may also be used: **H** for Help, **O** for OK, **A** for Apply, and **C** for Cancel.

General Tab

- **Paper Size:** Set the paper size as A4, Letter, or other paper sizes, according to your requirements.
- **Paper Type:** Choose the type of the paper. Options available in the list box are Printer Default, Plain, and Thick.
- **Paper Source:** Select from which tray the paper is used. By default, it is Auto Selection.
- **Orientation:** Select the direction in which information is printed on a page.
- **Duplex:** Print on both sides of paper to save paper.
- **Multiple pages:** Print several pages on one side of the paper.
- **Page Border:** Choose any of the border styles (e.g., Single-line hairline, Double-line hairline)

Image Tab

In this tab, you can change the brightness, resolution, or image position of your document.

Text Tab

Use this tab to set the character margin, line space, or the columns of the actual print output.

Margins Tab

- **Use Margins:** Set the margins for the document. By default, margins are not enabled. The user can change the margin settings by changing the values in the respective fields. Set by default, these values depend on the page size selected.
- **Unit:** Change the units to points, inches, or centimeters.

Printer-Specific Settings Tab

Select various options in the **JCL** and **General** frames to customize various settings. These options are specific to the printer and depend on the PPD file.

Security

5

This chapter describes how to configure the Security features for the machine.

The following topics are mentioned in this chapter:

- Security at Xerox
- Security Settings
- Machine Digital Certificate Management
- SNMP
- SNMPv3
- IP Sec
- IP Filtering
- 802.1X Authentication

Security at Xerox

For the latest information on securely installing, setting up and operating your machine see the Xerox Security Information Web site located at www.xerox.com/security.

Security Settings

To prevent unauthorized changes to printer settings, ensure a login ID and password areentered in the **System Administrator** area.

Administrator Accounts

1. At your workstation, open the Web browser and enter the IP Address of the machine in the Address Bar.
2. Press **Enter**.
3. Select **Properties**.
4. If prompted, enter the Administrator User Name (**admin**) and Password (**1111**), and select **Login.** Select **Properties.**
5. In **Security** on the left hand side select **System Security**.
6. Select **System Administrator**.
7. If required, enter Administrator details for:
   - Name
   - Phone Number
   - Location
   - E-mail Address
8. The **WebUI Access Control** check box controls access to the Internet Services screen. Select **Enable**, if required.
9. To change the Administrator Password, select the **Change Password** box and enter the required **Login ID** and **Password**. The defaults are **admin** and **1111**, respectively.
10. Select the **Advanced** button for **Advanced Access Control**.
11. Select **Protect Login IPv4 Address** if required, and enter the required login IP address that you want to protect in the **IPv4 Address** box.
12. Select the required option for **Login Failure Policy**. The options are: **Off**, **3 times**, and **5 times**.
13. Select the required number of minutes from the **Auto Logout** menu.
14. Select **Security Settings Reset** to enable this option if required.
15. Select **Save**.
16. Select **Apply** to save the changes.
17. Select **OK** when the acknowledgement message displays.

Feature Management

The Feature Management screen allows you to control the Services, Physical Ports, PC Scan Security and Network Protocols that are available on the machine.

1. At your workstation, open the Web browser and enter the IP Address of the machine in the Address Bar.
2. Press **Enter**.
3. Select **Properties**.
4. If prompted, enter the Administrator User Name (**admin**) and Password (**1111**), and select **Login**. Select **Properties.**
5. In **Security** on the left hand side and select **System Security**.
6. Select the **Feature Management** link in the directory tree.
7. To enable or disable a feature, select the required **Enable** or **Disable** check box.
   - For the **LPR/LPD Protocol**, enter the required port number. The default is 515.
   - For **Raw TCP/IP Printing Protocol**, enter the required port number. The default is 9100.
8. Click **Apply** to save the changes.
9. Select **OK**.

Restart Device

The Restart Device screen allows you to reboot the machine remotely from your desktop.

Note: When the machine is restarted, the Network Controller will take some time to restart. The network connectivity will be unavailable during this time.

1. At your workstation, open the Web browser and enter the IP Address of the machine in the Address Bar.
2. Press **Enter**.
3. Select **Properties**.
4. If prompted, enter the Administrator User Name (**admin**) and Password (**1111**), and select **Login.** Select **Properties.**
5. In **Security** on the left hand side, select **System Security**.
6. Select the **Restart Device** link in the directory tree.
7. To reboot the machine, select the required **Restart Now** button.
8. The **Do you really want to restart the device** screen appears. Click **Yes**. The machine reboots. CentreWare Internet Services may be unavailable for several minutes while the machine reboots.

Machine Digital Certificate Management

Overview

The machine can be configured for secure access with the SSL (Secure Socket Layer) protocol via Digital Certificates. SSL enables secure access to the machine.

To enable SSL on a machine, it needs to have its own digital certificate. When clients make a request to the machine, it exports the certificate to provide an encrypted channel.

There are two options available to obtain a server certificate for the machine:

- Have the machine create a Self Signed Certificate
- Create a request to have a Certificate Authority sign a certificate that can be uploaded to the machine.

A self-signed certificate means that the machine signs its own certificate as trusted and creates the public key for the certificate to be used in SSL encryption.

A certificate from a Certificate Authority or a server functioning as a Certificate Authority (for example Windows 2000 running Certificate Services) can be uploaded to the machine.

Note: A separate request is required for each Xerox machine.

Information Checklist

Ensure that the machine is configured with the following items:

- An IP Address or Host Name must be configured on the machine.
- DNS must be enabled and configured on the machine.

  Note: This is used to set the start time for self signed certificates.

Access the Machine Digital Certificate Management Screen

1. At your workstation, open the Web browser and enter the IP Address of the machine in the Address Bar.
2. Press **Enter**.
3. Select the **Properties** icon.
4. If prompted, enter the Administrator User Name (**admin**) and Password (**1111**), and select **Login**. Select **Properties.**
5. In **Security** on the left hand side, select **Network Security**.
6. Select the **Digital Certificate** link. The **Certificate Management** page displays.
7. Select **Add**.

Select one of the following options:

- Install/Create Device Certificate or CSR. The following options are available:
  - Create a Self-signed Device Certificate
  - Install CA signed Device Certificate

  - Create Certificate Signing Request (CSR)
- Install Root Certificate

Create a Self-Signed Certificate

1. In the **Install/Create New Certificate** area select **Create a Self Signed Device Certificate**.
2. Select **Next**.
3. In the **Self-signed Certificate** area:
   a. Enter a **Friendly Name**.
   b. In the **2 Letter Country Code** field enter the Country Code that represents the country in which the machine is located. The country code must be entered as a two-character ISO 3166 country code.
   c. If required, enter details in the following fields:
      - State/Province Name
      - Locality Name
      - Organization Name
      - Organization Unit

   Information entered for these options should describe the machine as per the X500 directory scheme but can be any value which is meaningful to the customer to identify the machine.

   Note: The **Common Name** is taken from the machine's IP Address/Host Name and Domain Name.

   d. In the **Valid Period** box, enter the number of days that the certificate should be valid. Once the specified time is reached, the certificate will expire. The start time is based on the current machine system time so it is important that the time is set correctly on the machine.
   e. Enter the **E-mail Address** of the Administrator who is responsible for the secure management of the machine.
4. Select the **Next** button. A message displays to show the success of the certificate creation.
5. Click the **Close** button. The certificate displays in the **Certificate Management** area.
6. Follow the steps in Enable Secure Connection.

Create a Certificate Signing Request

1. In the **Install/Create New Certificate** area select **Create Certificate Signing Request**.
2. Select **Next**.
3. In the Certificate Signing Request (CSR) area:
   a. Enter a **Friendly Name** to identify the request.
   b. In the **2 Letter Country Code** field enter the Country Code that represents the country in which the machine is located. The country code must be entered as a two-character ISO 3166 country code.
   c. If required, enter details in the following fields:
      - State/Province Name
      - Locality Name
      - Organization Name
      - Organization Unit

   Information entered for these options should describe the machine as per the X500 directory scheme but can be any value which is meaningful to the customer to identify the machine.

   Note: The **Common Name** is taken from the machine's IP Address/Host Name and Domain Name.

   d. Enter the **E-mail Address** of the Administrator who is responsible for the secure management of the machine.
4. Click **Next**.
5. In the Certificate Signing Request (CSR) area, click **Download**.
6. Send the downloaded file to your Certificate Authority for digital signing.
7. When you receive the signed certificate back from the Certificate Authority, follow the steps below to Install a CA Signed Device Certificate.

Install a CA Signed Device Certificate

1. In the **Install/Create New Certificate** area, select **Install CA Signed Device Certificate**.
2. Select **Next**.
3. In the **Certificate Information** area:
   a. Enter a **Friendly Name** to identify the certificate
   b. Enter the required **Private Password** and **Confirm Password.**
   c. In the **CA Signed Certificate** area click **Browse** to find the certificate file on your computer. Select the file.
   d. Click **Next**.
4. Select the **Apply** button to accept the changes.
   If prompted, enter the Administrator User Name (**admin**) and Password (**1111**), and select **OK**.
5. If successful, the **Current Status** area displays a confirmation message.
6. Follow the steps in Enable Secure Connection.

Install Root Certificate

1. In the **Install Root Certificate** area select **Install new Root Certificate**.
2. Select **Next**.
3. In the **Certificate Information** area, enter a **Friendly Name** to identify the certificate.
4. In the **Root Certificate** area click **Browse** to find the certificate file on your computer. Select the file.
5. Click **Next**.
6. Select the **Apply** button to accept the changes.
   If prompted, enter the Administrator User Name (**admin**) and Password (**1111**), and select **Login**.
7. If successful, the **Current Status** area will display a confirmation message.
8. Follow the steps in Enable Secure Connection.

Enable Secure Connection

Once the machine has a machine Server Certificate, you can enable Secure Connection.

1. At your workstation, open the Web browser and enter the IP Address of the machine in the Address Bar.
2. Press **Enter**.
3. Select the **Properties** icon.
4. If prompted, enter the Administrator User Name (**admin**) and Password (**1111**), and select **Login**. Select **Properties.**
5. In **Security** on the left hand side, select **Network Security**.
6. Select the **Secure Connection** link.
7. Click the **Select Certificate** button and select the required certificate. Click **Select**. The certificate displays in the **Certificate for Secure Connection** area.
8. In the **Secure HTTP** area, select the required option in the **HTTPs** menu. Select **Both HTTP and HTTPs** to enable Secure IPP or select **HTTPs Only**.
9. Select **Import and Export Functions** if required.
10. If you selected **Both HTTP and HTTPs,** select **On** from the **IPPs** menu if required.
11. Select **Apply** to save the changes.

Edit or Delete a Certificate

1. At your workstation, open the Web browser and enter the IP Address of the machine in the Address Bar.
2. Press **Enter**.
3. Select the **Properties** icon.
4. If prompted, enter the Administrator User Name (**admin**) and Password (**1111**), and select **Login**. Select **Properties.**
5. In the **Security** link on the left hand side select the **Network Security** link.
6. Select the **Digital Certificate** link. The **Certificate Management** page displays with a list of the certificates installed on this machine.
7. Select the check box next to the **Friendly Name** of the certificate that you want to edit or delete.
   - Select the **Edit** button to edit the certificate. Make the required changes and click **Apply**.
   - Select the **Delete** button to delete the certificate, and click **Yes** to confirm.

SNMP

SNMP (Simple Network Management Protocol) settings can be configured via CentreWare Internet Services.

1. At your workstation, open the Web browser and enter the IP Address of the machine in the Address Bar.
2. Press **Enter**.
3. Select the **Properties** icon.
4. If prompted, enter the Administrator User Name (**admin**) and Password (**1111**), and select **Login**. Select **Properties.**
5. In **Network Settings** select **SNMP**.
6. Select **SNMPv1/v2.**
   a. Select the **Enable** check box to enable **SNMPv1/v2 Protocol.**
   b. Select the required **Community Name from the list, or click Add to add a new SNMP Community**. The **Add** pop-up menu appears.
      - **Enter the required Name for the SNMP Community**.
      - **Select the required Access Permission.**
7. Select **Apply** to save the changes.
8. Select **OK** when the acknowledgement message displays.

SNMP Traps

You can specify IPv4 Trap Destination Addresses.

1. From the **SNMP** page, in the **SNMP Traps** area select **Add**.
2. In the **Trap Destination Address** area, enter details in the **IPv4 Address** and **Port Number** fields.
3. In the **Traps** area, enter the name in the **TRAP Community Name** field.
4. For **Traps to be received** check the boxes to select the following Traps:
   - Printer Traps
   - Cold Start Traps
   - Warm Start Traps
5. Select **Apply** to save the changes.
6. Select **OK** when the acknowledgement message displays.

To Edit Community Names or SNMP Traps

1. From the **SNMP** page, in the **Community Names** or **SNMP Traps** area select the name or address you want to edit.
2. Select **Edit**.
3. Change the required options and select **Apply** to save the changes.
4. Select **OK**.

To Delete Community Names or SNMP Traps

1. From the **SNMP** page, in the **Community Names** or **SNMP Traps** area select the name or address you want to delete.
2. Select **Delete**.
3. Select **Yes**.

   Note: Changes made to the GET or SET community names for this machine require corresponding GET or SET community name changes for each application which uses the SNMP protocol to communicate with this machine (e.g., Xerox CentreWare Web, any third party network management applications, etc.).

SNMPv3

SNMPv3 can be enabled to create an encrypted channel for secure machine management.

1. At your workstation, open the Web browser and enter the IP Address of the machine in the Address Bar.
2. Press **Enter**.
3. Select the **Properties** icon.
4. If prompted, enter the Administrator User Name (**admin**) and Password (**1111**), and select **Login**. Select **Properties.**
5. In **Network Settings** select the **SNMP**.
6. Select **SNMPv3**. The **SNMPv3** page displays.
7. In the **Setup** area:
   a. Select the **Enable** check box to enable **SNMPv3 Protocol**.
   b. In the **Authentication** area, enter the required **User Name**.
   c. Enter a password in the **Authentication Password** field.
   d. Enter the password again in the **Confirm Password** field.
   e. For **Authentication Algorithm**, select either **MD5** or **SHA**.
   f. Enter a password in the **Privacy Password** field.
   g. Enter the password in the **Confirm Password** field.
   h. The **Privacy Algorithm** displays.
8. Select **Apply** to save the changes.
9. Select **OK** when the acknowledgement message displays.

IP Sec

IP Sec (IP Security) is comprised of the IP Authentication Header and IP Encapsulating Security Payload protocols that secure IP communications at the network layer of the protocol stack, using both authentication and data encryption techniques. The ability to send IP Sec encrypted data to the printer is provided by the use of a public cryptographic key, following a network negotiating session between the initiator (client workstation) and the responder (printer or server). To send encrypted data to the printer, the workstation and the printer have to establish a Security Association with each other by verifying a matching password (shared secret) to each other. If this authentication is successful, a session public key will be used to send IP Sec encrypted data over the TCP/IP network to the printer. Providing additional security in the negotiating process, SSL (Secure Sockets Layer protocols) are used to assure the identities of the communicating parties with digital signatures (individualized checksums verifying data integrity), precluding password guessing by network sniffers.

Enable IP Sec

This procedure requires that you have a Shared Secret available.

IP Sec cannot be enabled until Secure Connection is enabled on the machine. For instructions, refer to Enable Secure Connection.

1. At your workstation, open the Web browser and enter the IP Address of the machine in the Address Bar.
2. Press **Enter**.
3. Select the **Properties** icon.
4. If prompted, enter the Administrator User Name (**admin**) and Password (**1111**), and select **Login**. Select **Properties.**
5. In the **Security** link on the left hand side, select the **Network Security** link.
6. Select the **IP Security** link. The **IP Security** page displays.
7. Click **Enable** to enable the **IP Sec** protocol.
8. Enter the **Shared Secret** and **Confirm Shared Secret**.
9. Select **Apply** to save the settings. Select **OK** when the acknowledgement message displays.
10. The **IP Sec Current Status** confirms the status of the IP Sec protocol.
11. To change the Shared Secret, click the **Change Shared Secret** button and enter the new Shared Secret information.
12. Click **Apply** to save the changes.

IP Filtering

Overview

The IP Filtering is a security feature that allows you to control access to Internet Services. IP Filtering allows you to prevent unauthorized access by IP (Internet Protocol).

The IP Filtering feature provides security to the machine, by allowing you to register the IP addresses permitted to communicate with the machine. This feature is used to prevent Raw TCP/IP Printing, LPR/LPD, HTTP, Fax to PC, IPP, SNMP and Scan Manager for Network from unauthorized users

Enable IP Filtering

1. At your Workstation, open the Web browser, and enter the IP Address of the machine into the Address bar.
2. Press **Enter**.
3. Click the **Properties** icon.
4. If prompted, enter the Administrator User ID **admin** and Password **1111**, and select **Login**.
5. Click the **Security** link.
6. Click the **Network Security** link.

For IPv4 Filtering

1. Select **IPv4 Filtering**.
2. Select the IPv4 Filtering **Enable** check box.
3. Enter the IP Address(es) to permit IP addresses to access the device.
4. Enter the IP address or an IP address range by using an asterisk (*) as a wild-card character. For example:

   192.246.238.* is used to reference a subnet of host addresses

   192.246.* is used to reference a wider subnet of host addresses

   192.* is used to reference the widest subnet of host addresses
5. The ability to filter on a port or ports is also supported. Enter the port information.
6. Click **Apply** to accept changes.
7. Click **OK**.

For IPv6 Filtering

1. Select **IPv6 Filtering**.
2. Select the IPv6 Filtering **Enable** check box.
3. Enter the IP Address(es) to permit IP addresses to access the device.

4. Enter the IPv6 address in the form of a CIDR convention. Prefix indicates the number of leftmost bits to be referenced.

   For example:

   2001:DB8:1234:215:215:99FF:FE04:D345 / 128 is used to reference a complete address.

   2001:DB8:1234:215:215:99FF:FE04:D345 / 64 is used to reference prefix address consisted of leftmost 64 bits only.

   2001:DB8:1234:215:215:99FF:: / 80 is used to reference prefix address consisted of leftmost 80 bits only.
5. The ability to filter on a port or ports is also supported. Enter the port information.
6. Click **Apply** to accept changes.
7. Select **OK** when the acknowledgement message displays.

Enable MAC Filtering

1. Select **MAC Filtering** in the directory tree. The MAC Filtering page displays.
2. Select the MAC Filtering **Enable** check box.
3. In the MAC Address to Filter Out area, select **Add**.
4. Enter the MAC Address that you want to filter out.
5. Select **Apply** to save the changes.
6. Select **OK** when the acknowledgement message displays.

802.1X Authentication

This is the procedure to follow to install and setup 802.1X Authentication:

Overview

The Xerox machine supports IEEE 802.1X Authentication via Extensible Authentication Protocol (EAP). IEEE 802.1X ensures all machines on the network are authenticated and authorized to use the network. 802.1X can be enabled for machines connected through wired Ethernet networks.

The Administrator can configure the machine to use one EAP type. EAP types supported on the machine are:

- EAP-MD5
- PEAP
- EAP-MSCHAPv2
- EAP-TLS

Information Checklist

Before starting ensure that the following items are available and/or the tasks have been performed:

- 802.1X authentication must be supported on the network where the machine is connected.
- Ensure that your 802.1X Authentication Server and authentication switch are available on the network.
- Create a User Name and Password on your Authentication Server that will be used to authenticate the machine.

Enable 802.1X Using CentreWare Internet Services

Authentication via TLS requires a Device Certificate to be configured or uploaded to the machine. For instructions, refer to Access the Machine Digital Certificate Management Screen.

Authentication via PEAP and TLS require a Root Certificate to be uploaded to the machine. For instructions refer to Install Root Certificate.

1. At your workstation, open the Web browser and enter the IP Address of the machine in the Address Bar.
2. Press **Enter**.
3. Select the **Properties** icon.
4. If prompted, enter the Administrator User Name (**admin**) and Password (**1111**), and select **Login**. Select **Properties.**
5. In the **Security** link on the left hand side select the **Network Security** link.

6. Select **802.1X** in the directory tree. The **802.1x Security** page displays.
   a. For **802.1x Security**, select the **Enable** check box.
   b. From the **Authentication Methods** area select one of the following methods:
      - EAP-MD5
      - EAP-MSCHAPv2
      - PEAP
      - TLS
7. If you select **EAP-MD5, EAP-MSCHAPv2** or **PEAP**, the **Credentials** option appears. Enter the required details in the **Username** and **Password** fields.
8. If you select **PEAP** or **TLS**, the **Server Validation** option appears. Click the **Select Certificate** button and select the required root certificate to provide server validation.
9. If you select **TLS**, the **Device Validation** option appears. Click the **Select Certificate** button and select the required certificate to provide device validation.
10. Select the **Apply** button to accept the changes.
11. Select **OK** when the acknowledgement message displays.

Maintenance

6

This chapter includes:

- Consumables
- General Care
- Software Update

Consumables

Customer-replaceable consumable supplies for this printer include the following:

- Xerox Phaser 3020 Standard Capacity Print Cartridge

Placing an Order for Xerox Consumables:

Xerox supplies for your printer can be ordered in several ways:

- Contact your local Xerox Representative or reseller. Provide your Company Name, product number and the machine serial number.

  Note: The machine's serial number is located on the machine's data plate on the rear cover, is accessible from the Machine Status button in the System Setup menu, and also is printed on the Configuration report.

- Order supplies online at www.xerox.com
- Access the Xerox web page via Easy Printer Manager:

1. Select the printer for which you want to order supplies.
2. Click the **Order Supplies** button.
3. When another window pops up, select **Order Supplies**. When the Xerox web page for ordering supplies appears, place your order.

- Access the Xerox web page via CentreWare: From your printer's CWIS page, click the **Support** tab, then **Support Links** on the left navigation panel. Then click the **Order Supplies** link on the bottom of the page to go to the Xerox web site and order online.

WARNING: Use of non-Xerox supplies is not recommended. Use of toner and print cartridges other than genuine Xerox Toner can affect print quality and printer reliability. Xerox Toner is the only toner designed and manufactured under strict quality controls by Xerox for use with this specific printer.

The Xerox Warranty, Service Agreement, and Total Satisfaction Guarantee do not cover damage, malfunction, or degradation of performance caused by use of non-Xerox supplies, or the use of Xerox supplies not specified for this printer. The Total Satisfaction Guarantee is available in the United States and Canada. Coverage could vary outside these areas. Please contact your Xerox representative for details.

Checking the Status of Consumables

You can check the status of your installed printer consumables at any time.

From the Printer:

If you enabled the Low Toner Indicator (usually during setup of your printer) an LED symbol at the top of the control panel indicates the status of the toner level in the print cartridge.

- When that symbol light is off, the print cartridge still has normal capacity.
- When that symbol is blinking orange, a small amount of toner is left in the cartridge. The cartridge is close to its estimated limit of use. Check that a new Xerox replacement print cartridge is available and order one if not. You may temporarily increase the printing quality by redistributing toner; see Redistributing Toner.
- When that toner symbol is lit solid orange, it is time to replace the print cartridge. See Replacing the Print Cartridge.

To Enable the Low Toner Indicator:

1. At your PC, open Easy Printer Manager from the Start menu.
2. Select the printer.
3. Click **Properties**. You will be taken to the CentreWare Internet Services page for the printer.
4. If prompted, enter the **ID** (admin) and **Password** (1111).
5. Select **Properties** > **System** > **Setup**.
6. Set the **Low Toner Alert** to **On**.
7. Enter a percentage for the **Toner Low Alert Level** from 1 - 50 % .
8. Select the additional **Alert** features you wish to enable. E-mail Alert will send you an e-mail when the printer is low on toner or needs a new print cartridge. See the Alerts information in the Installation and Setup section of this Guide.
9. Select **Apply**. Users will now be alerted in several ways when the printer needs supplies attention.

Checking Supplies Status from Your PC

Use **Easy Printer Manager** to view a supplies status page:

1. At your PC, open Easy Printer Manager from the **Start** menu (in Windows).
2. Select the printer.
3. From the Basic mode page (the smaller window), you can see the toner supply level in the Supplies tab. If you open EPM in the Advanced mode (large window) you will see Supplies Information just below the device picture.

   Note: Use the Switch icon in the EPM header to move between Basic and Advanced modes.

Use **CentreWare Information Services (CWIS)** to check supplies status.

Note: You must have the printer connected to the network to access CWIS. It will not be available via a USB connection.

1. Enter the IP Address of the printer in your internet browser.
2. If prompted from the CentreWare page, enter the **ID** (admin) and **Password** (1111).

3. Select the **Status** tab.
4. Click **Supplies** in the left navigation to see the toner levels in the printer.

Storage and Handling of Consumables

The print cartridge contains components that are sensitive to light, temperature, and humidity. Follow the recommendations provided to ensure the optimum performance, highest quality, and longest life from your new print cartridge.

Follow the guidelines below for storing and handling of consumables:

- Always store print cartridges unopened and inside their original package.
- Store the correct side up in a horizontal position (not standing on end).
- Do not store consumables in:
  - Temperatures greater than 40˚C (104˚F).
  - Humidity range less than 20 % and not greater than 80 %.
  - An environment with extreme changes in humidity or temperature.
  - Direct sunlight or room light.
  - Dusty places.
  - A vehicle for a long period of time.
  - An environment where corrosive gases are present.
  - An environment with salty air.
- Do not store consumables directly on the floor.
- Do not touch the surface of the photosensitive drum in the print cartridge.
- Do not expose the print cartridge to unnecessary vibrations or shock.
- Never manually rotate the drum in the print cartridge, especially in the reverse direction; this can cause internal damage and toner spillage.

General Care

Redistributing Toner

When the print cartridge is near the end of its life:

- White streaks on prints or light printing occurs.
- The orange LED toner light on the control panel is blinking.

If this happens, you can temporarily improve print quality by redistributing the remaining toner in the cartridge. In some cases, white streaks or light printing will still occur even after you have redistributed the toner.

Follow these steps to redistribute the toner in your print cartridge and thus temporarily improve print quality.

1. Open the top cover.

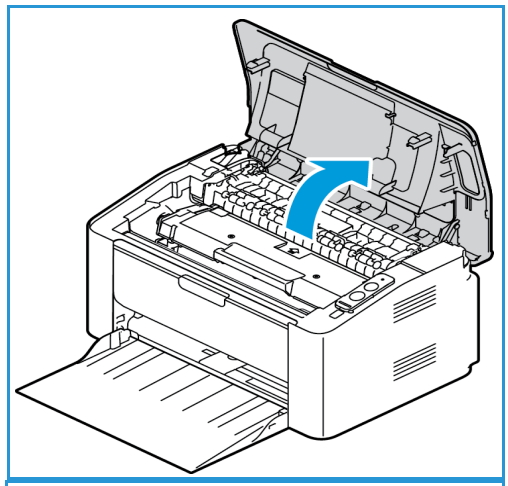

2. Pull the print cartridge out.

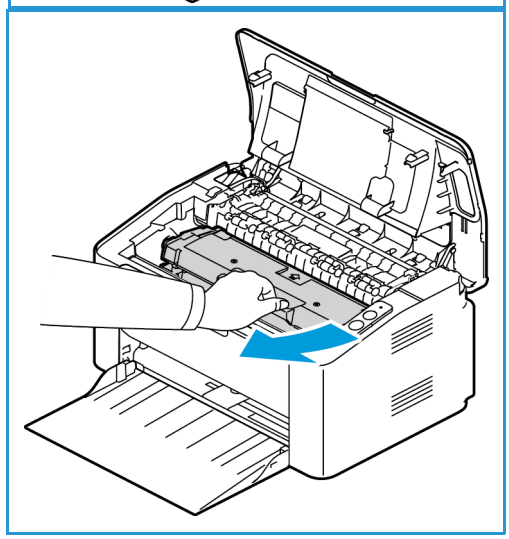

3. Slowly shake the cartridge five or six times to distribute the toner evenly inside the cartridge.

   Note: If toner gets on your clothing, wipe it off with a dry cloth and wash clothing in cold water. Hot water sets toner into fabric.

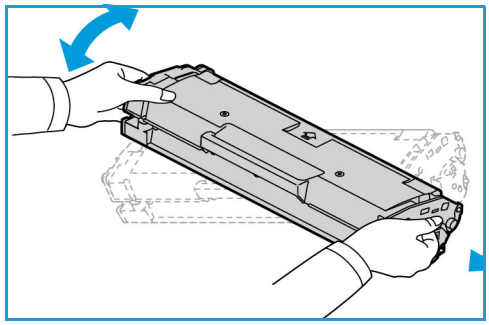

4. Re-install the print cartridge by inserting it slowly into the machine.
5. Close the printer cover. The machine status light on the control panel should be green, indicating the machine is ready to print. The toner LED light should be out, indicating that the print cartridge has enough toner to print.

   CAUTION: Do not touch the green underside of the print cartridge. Use the handle on the cartridge to avoid touching this area.

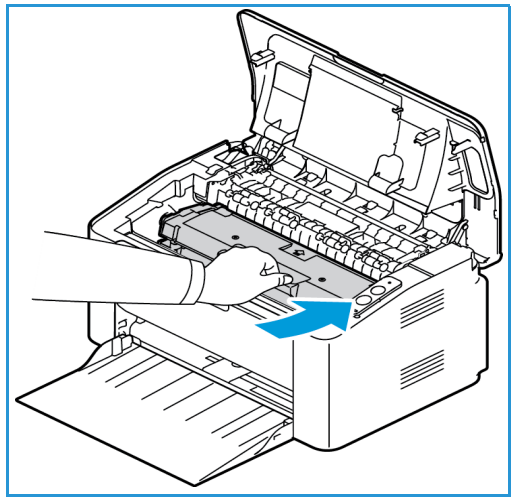

Replacing the Print Cartridge

When the Toner LED light at the top of the printer control panel is solid orange, it is time to replace the print cartridge.

Replace the print cartridge using the following instructions.

1. Open the top cover.

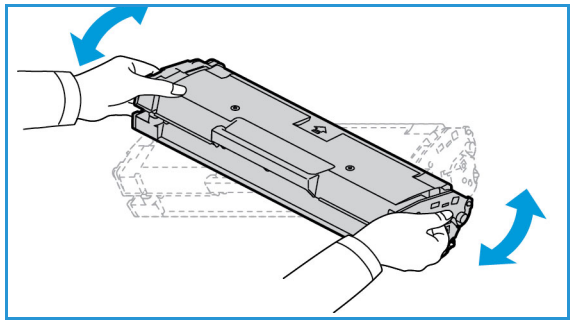

2. Pull out the print cartridge.

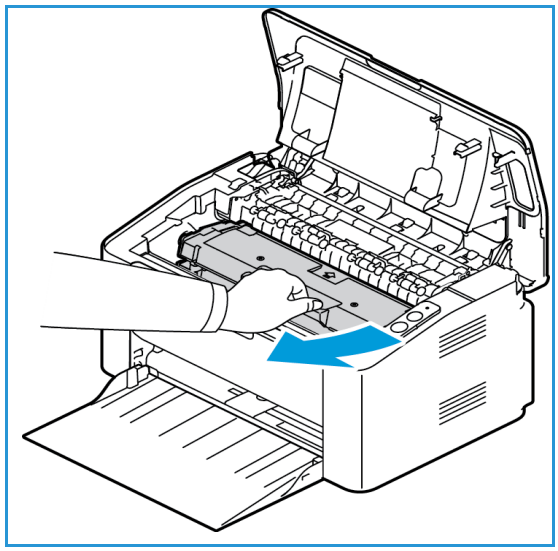

CAUTION: Do not touch the green underside of the print cartridge. Use the handle on the cartridge to avoid touching this area.

WARNING: When replacing consumables, DO NOT remove machine covers or guards that are fastened with screws. You cannot maintain or service any of the parts that are behind these covers and guards. Do NOT attempt any maintenance procedure that is NOT specifically described in the documentation supplied with your machine.

3. Remove the new print cartridge from the packaging. Read and follow the directions on the packaging to remove the protective materials as directed.
4. Slowly shake the cartridge five or six times to distribute the toner evenly inside the cartridge.

   Note: If toner gets on your clothing, wipe it off with a dry cloth and wash clothing in cold water. Hot water sets toner into fabric.

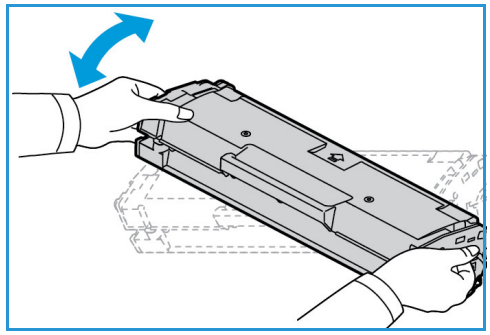

5. Hold the new print cartridge by the handle and slowly insert it into the machine. Tabs on the sides of the cartridge and corresponding grooves within the machine will guide the cartridge into the correct position until it locks into place.
6. Close the top cover. The machine status light on the control panel should be green, indicating the machine is ready to print. The toner LED light should be out, indicating that the print cartridge has enough toner to print.

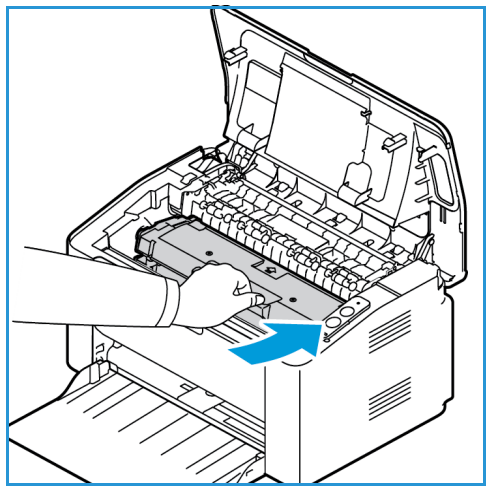

Recycling Consumables

For information on Xerox supplies recycling programs, go to www.xerox.com/gwa.

Cleaning the Machine

WARNING: When cleaning the machine do NOT use organic or strong chemical solvents or aerosol cleaners. Do NOT pour fluids directly onto any area. Use supplies and cleaning materials only as directed in this documentation. Keep all cleaning materials out of the reach of children.

WARNING: Do not use pressurized air-spray cleaning aids on or in this equipment. Some pressurized air-spray containers contain explosive mixtures and are not suitable for use in electrical applications. Use of such cleaners can result in a risk of explosion and fire.

Control Panel, Paper Trays, and Output Tray

Regular cleaning keeps the display, control panel and other external machine areas free from dust and dirt.

1. Use a soft, lint-free cloth, lightly dampened with water.
2. Wipe clean the entire area of the control panel.
3. Wipe clean the output tray, paper trays and other outside areas of your machine.
4. Remove any residue with a clean cloth or paper towel.

Internal Areas

During the printing process, paper, toner, and dust particles can accumulate inside the machine. This can cause print quality problems, such as toner specks or smearing. Cleaning inside the machine clears and prevents these problems.

1. Turn the machine off and unplug the power cord. Wait for the machine to cool down.
2. Open the top cover.

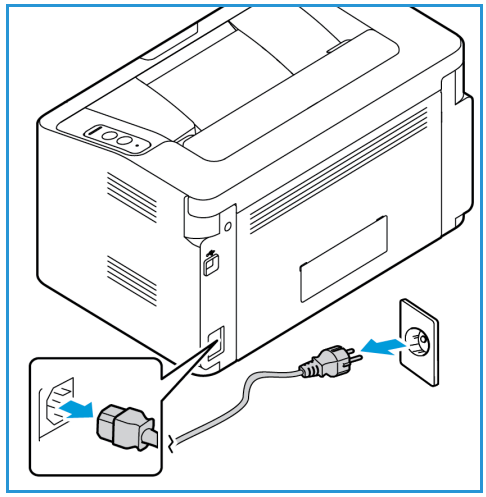

3. Pull the print cartridge out and place it on a clean flat surface.

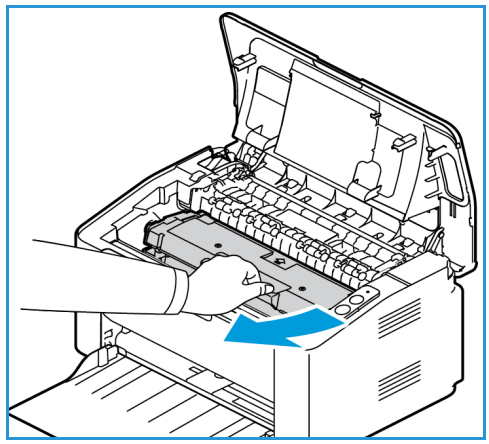

CAUTION:

- To prevent damage to the print cartridge, do not expose it to light for more than a few minutes. Cover it with a piece of paper, if necessary.
- Do not touch the green surface on the underside of the print cartridge. Use the handle on the cartridge to avoid touching this area.

4. With a dry, lint-free cloth, wipe away any dust and spilled toner from the print cartridge area.

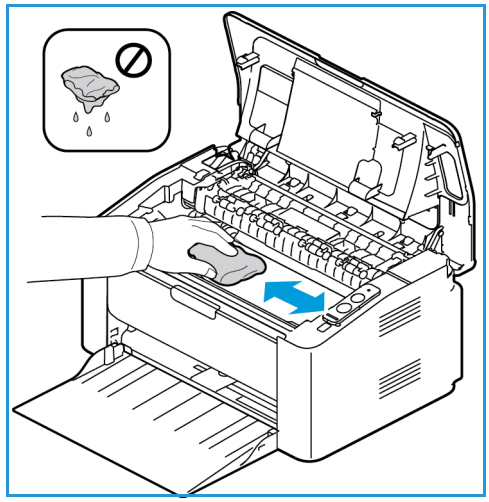

CAUTION: While cleaning the inside of the machine, be careful not to damage any inside parts. Do not use solvents such as benzene or thinner to clean. Printing quality problems can occur and damage can be caused to the machine.

5. Re-install the print cartridge. Tabs on the sides of the cartridge and corresponding grooves within the machine will guide the cartridge into the correct position until it locks into place.

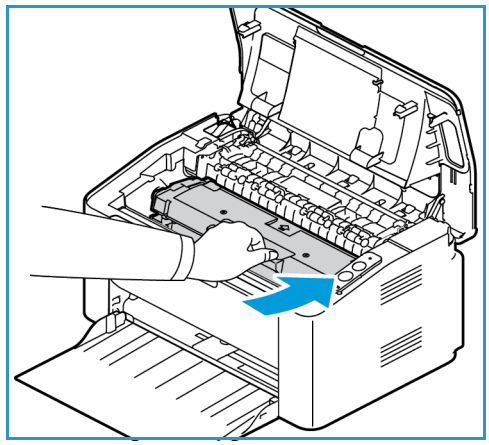

6. Close the top cover.
7. Plug in the power cord and turn the machine on. The printer is ready when the machine status light is green.

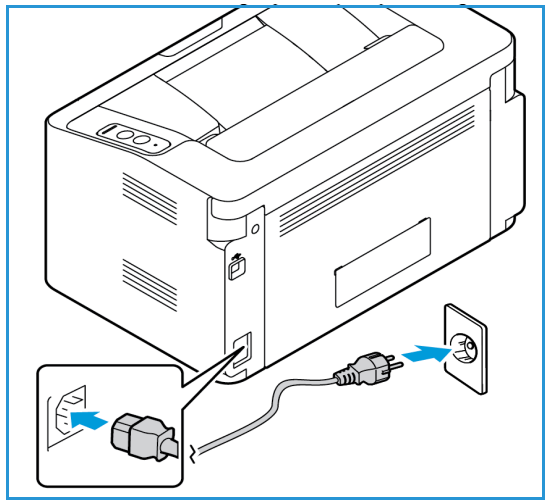

Moving the Machine

- When moving the machine, do not tilt or turn it upside down as the inside of the machine may become contaminated with toner, which can cause damage to the machine or adversely affect print quality.
- When moving the machine, make sure to hold the machine securely.

Software Update

Xerox is continually seeking to improve its products. A software revision may become available to improve the functionality of your machine. The Software Upgrade feature allows the customer to upgrade the machine software without needing a Customer Service Representative to be present.

The Software Upgrade Process

The software can be upgraded over a network connection using CentreWare Internet Services.

- Any jobs in the printer queue must be allowed to complete or be deleted before initiating a software upgrade.
- This procedure will prevent further jobs from being received until the upgrade has completed.
- All configured network settings and installed options will be retained by the machine after the Software Upgrade process.

Process Checklist

Before starting ensure that the following items are available and/or the tasks have been performed:

- Obtain the new software upgrade file for your machine from the www.xerox.com web site or from your Xerox Customer Support Representative. The upgrade file will have an extension of **.hd**. Download the upgrade file to a local or network drive. You will be able to delete the file after the upgrade procedure.
- It is important to obtain the correct upgrade file for your particular model of machine. For instructions to determine which model of machine you have, refer to Installation and Setup.
- TCP/IP and HTTP protocols must be enabled on the machine so that the machine web browser can be accessed.

Procedure

Note: The upgrade should take less than 10 minutes unless there are network issues.

1. At your workstation, open the web browser and enter the IP Address of the machine in the Address Bar.
2. Press **Enter**.
3. Select the **Login** link at the top of the screen. Enter the Administrator User Name (**admin**) and Password (**1111**), and select **Login**.
4. Select **Properties**.
5. In the **Security** link on the left hand side select the **System Security** link.
6. Select the **Feature Management** link in the directory tree.
7. Select the **Firmware Upgrade Enable** box.
8. Click **Apply** to save the changes.
9. Select the **Support** tab.
10. In the **Firmware Upgrade** link select the **Upgrade Wizard** button.

11. The **Firmware Upgrade Wizard** screen appears. In the **Firmware File** area:
    a. Select **Browse**.
    b. Locate and select the software upgrade **.hd** file obtained earlier.
    c. Select **Open**.
12. Select **Next.** The firmware will now be verified and display information about the upgrade file.
13. Select **Next** to continue. The upgrade should take less than 10 minutes unless there are network issues.
14. Once the machine has completed the upgrade it will reboot automatically. To check the firmware version, open **CWIS** by entering your machine's IP address in your browser window. Select **Machine Settings**. Select **Firmware**, then **Properties** to see if the firmware has been updated to the new version.

Troubleshooting

7

This chapter includes:

- Overview
- Clearing Paper Jams
- Common Problems
- Further Assistance

Overview

This section provides information on what to do if a problem occurs with your machine. Follow this problem-solving procedure:

1. When the machine status light changes or an error occurs, follow the steps indicated in this section to resolve the problem.
2. If the problem cannot be resolved, power off and on, and try the job again.
3. If the problem persists, call for service.

Machine Status Indicator

The color of the Status LED located on the control panel indicates the machine's current status. The table below describes the various indicators.

Color	Status	Description
None	Off	Machine is offline OR Machine is in Power Saver mode, if Machine Status light is off but Power button is blue.
Green	On	The machine is on-line and ready to be used.
	Blinking	The machine is receiving and printing data.
Red	Blinking	Waiting for the WPS button to be pressed for manual printing.
	On	• A cover is open. Close the cover. • There is no paper in the tray. Load paper in the tray. (See Paper and Media.) • The machine has stopped due to a major error. • Manual duplex job is printing.
Orange	Blinking	• Upgrading firmware.
	On	• A paper jam has occurred (**See** Clearing Paper Jams.).

Avoiding Paper Jams

If these guidelines are followed, most paper jams can be avoided.

- Ensure that the adjustable guides on the paper tray are positioned correctly. (See Loading Paper Tray.)
- Do not overload the tray. Ensure that no more than 150 sheets of 20 lb/80 gsm paper are loaded, or no more than 10 sheets of special paper or envelopes.
- Do not remove paper from the tray while your machine is printing.
- Flex, fan, and straighten paper before loading.
- Do not use creased, damp, or highly curled paper.
- Do not mix paper types in the tray.
- Use only recommended print media. (See Media Types.)
- Ensure that the recommended side of the print media is facing up in the tray.

Clearing Paper Jams

When a paper jam occurs, the machine status light turns orange. Check the accessible machine areas for paper stuck in the paper path and remove it carefully. Follow these directions to resolve paper jam problems in various areas of the machine.

Paper Tray Jams

1. Remove the paper from the tray.
2. Remove the jammed paper in the tray area by gently pulling it straight out.

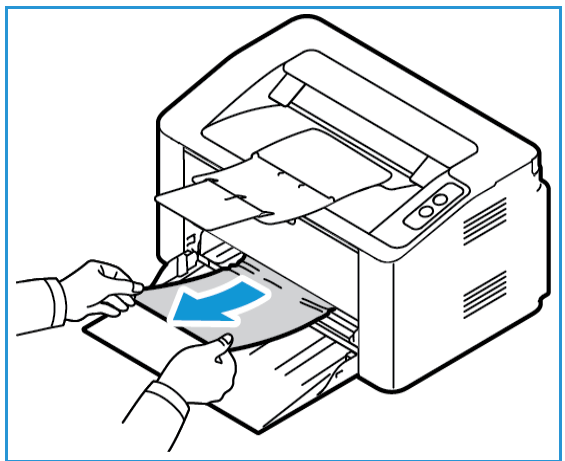

3. Lift the top cover, then close it. Printing automatically resumes.

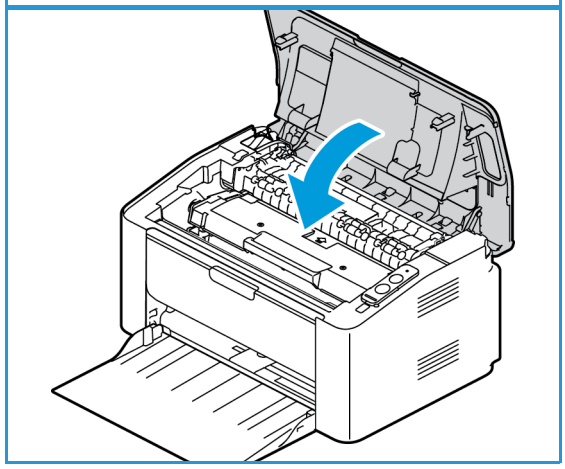

Clearing Jams Inside the Machine

CAUTION: Some areas inside the machine are hot. Take care when removing paper from machine.

1. Open the top cover of the printer.

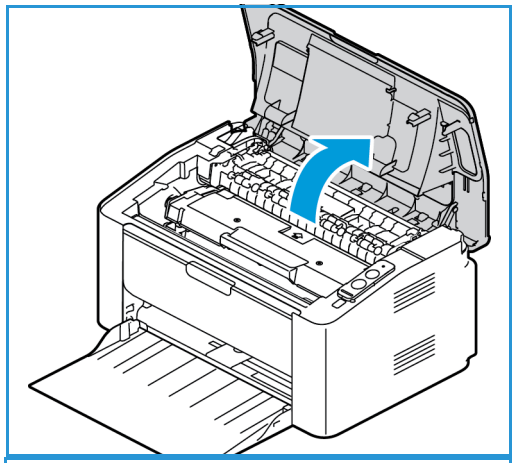

2. Remove the print cartridge.

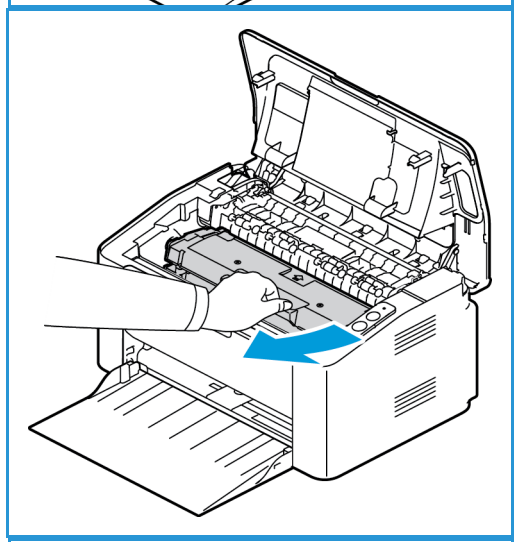

3. Lift the baffle covering the paper path and check for any paper stuck in the rollers.

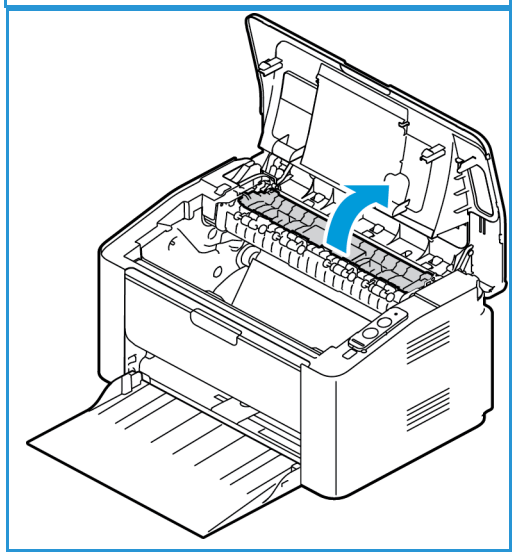

4. Pull out any paper you see there slowly and gently.

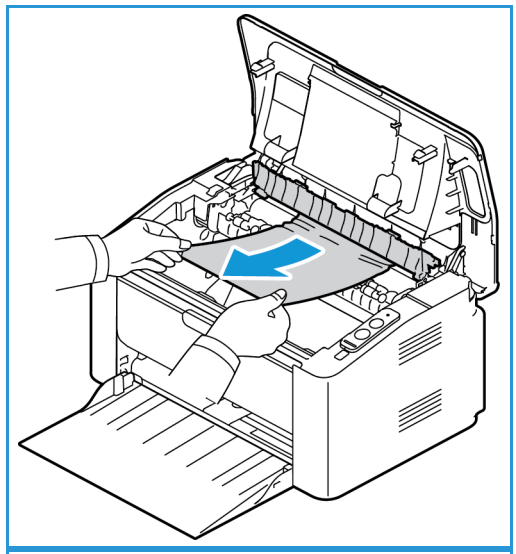

5. Lower the baffle and re-install the print cartridge.

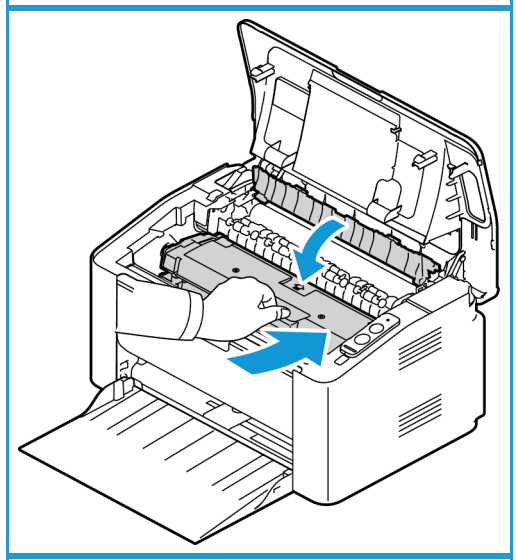

6. Close the top cover. Printing automatically resumes.

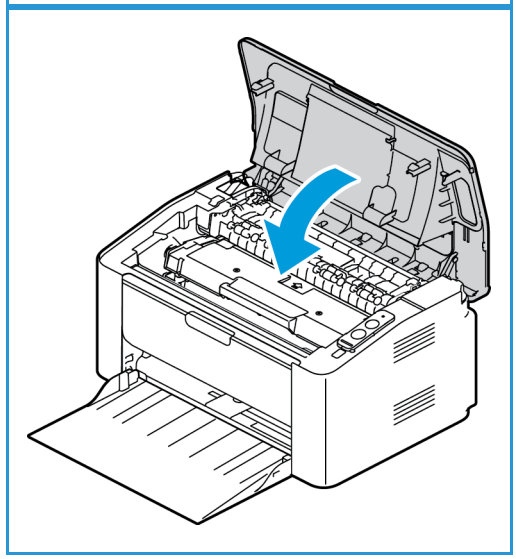

Common Problems

The following chart lists some conditions that may occur and the recommended solutions. Follow the suggested solutions until the problem is corrected. If the problem persists, call for service.

Paper Feeding Problems

Condition	Suggested Solutions
Paper jams during printing.	• Clear the paper jam. (See Avoiding Paper Jams.)
Paper sticks together.	• Check the maximum paper capacity of the tray. (See Media Specifications.) • Make sure that you are using the correct type of paper. (See Media Types.) • Remove paper from the tray and flex or fan the paper. • Humid conditions may cause some paper to stick together. • Different types of paper may be stacked in the tray. Load paper of only one type, size, and weight.
Paper does not feed into the machine.	• Remove any obstructions from inside the machine. • Paper has not been loaded correctly. Remove paper from the tray and reload it correctly. • There is too much paper in the tray. Remove excess paper from the tray. • The paper is too thick. Use only paper that meets the specifications required by the machine. (See Media Specifications.)
The paper keeps jamming.	• There is too much paper in the tray. Remove excess paper from the tray. • An incorrect type of paper is being used. Use only paper that meets the specifications required by the machine. (See Media Types.)
Transparencies stick together in the paper exit.	• Use only transparencies specifically designed for laser printers. Remove each transparency as it exits from the machine.
Envelopes skew or fail to feed correctly.	• Ensure that the paper guides are against both sides of the envelopes.

Printing Problems

Condition	Possible Cause	Suggested Solutions
The machine does not print.	The machine is not receiving power.	• Check the power cord connections. • Check the power switch and the power source.
	The machine is not selected as the default machine.	• On your PC, select your machine as your default machine in Windows.
	Check the machine for the following: • The top cover is not closed. Close the machine top cover. • Paper is jammed. Clear the paper jam. (See Avoiding Paper Jams.) • No paper is loaded. Load paper. • The print cartridge is not installed. Install the print cartridge. If a system error occurs, contact your service representative.	
	The connection cable between the computer and the machine is not connected properly.	• Turn off the printer. Disconnect the machine cable and reconnect it. Turn the printer on.
	The connection cable between the computer and the machine is defective.	• If possible, attach the cable to another computer that is working properly and print a job. You can also try using a different machine cable.
	The port setting is incorrect.	• Check the Windows printer setting to make sure that the print job is sent to the correct port.
	The machine may be configured incorrectly.	• Check the printer driver options to ensure that all of the print settings are correct. (See Print Procedures.)
	The printer driver may be installed incorrectly.	• Reinstall the printer software. (See Install Printer Software.)
	The machine is malfunctioning.	• Check the machine status light on the control panel to see if the machine is indicating a major error. Contact a service representative.
A print job is extremely slow.	The job may be very complex.	• Reduce the complexity of the page or try adjusting the print quality settings.

Condition	Possible Cause	Suggested Solutions
Half the page is blank.	The page orientation setting may be incorrect.	• Change the page orientation in your application. See the printer driver help screen.
	The paper size and the paper size settings do not match.	• Ensure that the paper size in the printer driver settings matches the paper in the tray. • Or, ensure that the paper size in the printer driver settings matches the paper selection in the software application settings you use.
The machine prints, but the text is wrong, garbled, or incomplete.	The machine cable is loose or defective.	• Disconnect the machine cable and reconnect. Try a print job that you have already printed successfully. If possible, attach the cable and the machine to another computer that you know works and try a print job. • Try a new machine cable.
	The wrong printer driver was selected.	• Check the application's printer selection menu to ensure that your machine is selected.
	The software application is malfunctioning.	• Try printing a job from another application.
	The operating system is malfunctioning.	• Exit Windows and reboot the computer. Turn the printer off and back on again.
	If you are in a DOS environment, the font setting for your machine may be set incorrectly.	• Change the font setting. You can set the font from Device Settings in Xerox Easy Printer Manager on your PC.
Pages print, but they are blank.	The print cartridge is defective or out of toner.	• Redistribute the toner to check if there is still toner left in the cartridge. (See Redistributing Toner.) • If necessary, replace the print cartridge (see Replacing the Print Cartridge).
	The file may have blank pages.	• Check the file to ensure that it does not contain blank pages.
	Some parts, such as the controller or the board, may be defective.	• Contact a service representative.

Condition	Possible Cause	Suggested Solutions
The machine does not print a PDF file correctly. Some parts of graphics, text, or illustrations are missing.	Incompatibility between the PDF file and the Acrobat products.	• Printing the PDF file as an image may enable the file to print. Turn on *Print As Image* from the Acrobat printing options. It will take longer to print when you print a PDF file as an image.
The print quality of photos is not good. Images are not clear.	The resolution of the photo is very low.	• Reduce the photo size. If you increase the photo size in the software application, the resolution will be reduced.
Before printing, the machine emits vapor near the output tray.	Using damp paper can cause vapor during printing.	• Load a new batch of paper. • To avoid the paper absorbing too much moisture, do not open packages of paper until required.

Print Quality Problems

If the inside of the machine is dirty or paper has been loaded improperly, there might be a reduction in print quality. See the table below to clear the problem.

Condition	Suggested Solutions
Light or faded print 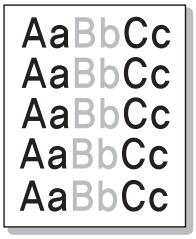 	• If a vertical white streak or faded area appears on the page, the toner supply is low. You may be able to temporarily extend the print cartridge life. (See Redistributing Toner.) If this does not improve the print quality, install a new print cartridge. • The paper may not meet paper specifications; for example, the paper may be too moist or rough. (See Media Guidelines.) • If the entire page is too light, the print resolution setting is too low or the ECO mode is on. Adjust the print resolution and turn the ECO mode off. See the help screen of the printer driver. • A combination of faded or smeared defects may indicate that the print cartridge needs replacing. (See Replacing the Print Cartridge.)
Toner specks 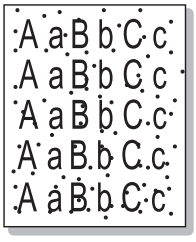	• The paper may not meet specifications; for example, the paper may be too moist or rough. (See Media Guidelines.) • The paper path may need cleaning. (See Clearing Jams Inside the Machine.)

Condition	Suggested Solutions
Dropouts 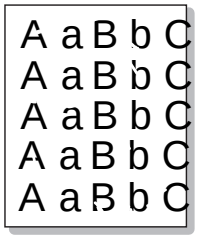 	If faded areas, generally rounded, occur randomly on the page: • A single sheet of paper may be defective. Try reprinting the job. • The moisture content of the paper is uneven or the paper has moist spots on its surface. Try a different brand of paper. (See Media Guidelines.) • The paper is damaged. The manufacturing processes can cause some areas to reject toner. Try a new ream or brand of paper. • Change the printer option and try again. Go to **Printing Preferences** in Easy Printer Manager or CWIS, select the **Paper** tab, and set type to **Thick**. (See Paper and Media.) • If these steps do not correct the problem, contact a service representative.
White Spots 	If white spots appear on the page: • The paper is too rough and dirt from the paper falls to the inner areas of the machine on to the transfer roller. Clean the inside of your machine. (See Cleaning the Machine.) • The paper path may need cleaning. (See Cleaning the Machine.)
Vertical lines 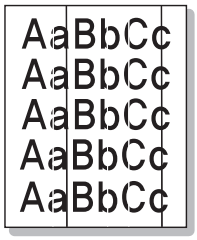 	If black vertical streaks appear on the page, the surface (drum part) of the print cartridge inside the machine has probably been scratched. • Remove the print cartridge and install a new one. (See Replacing the Print Cartridge.) If white vertical streaks appear on the page the inside of the machine may be dirty. • Clean the inside of your machine. (See Cleaning the Machine.) If these steps do not correct the problem, contact a service representative.
Background 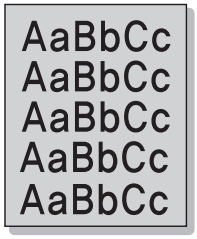 	If the amount of background shading becomes unacceptable: • Change to a lighter weight paper. (See Media Specifications.) • Check the environmental conditions: very dry conditions or a high level of humidity (higher than 80 % RH) can increase the amount of background shading. • Remove the old print cartridge and install a new one. (See Replacing the Print Cartridge.)
Toner smear 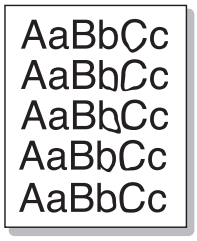 	If toner smears on the page: • Clean the inside of the machine. (See Cleaning the Machine.) • Check the paper type and quality. (See Media Guidelines.) • Remove the print cartridge and install a new one. (See Replacing the Print Cartridge.)

Condition	Suggested Solutions
Vertical repetitive defects 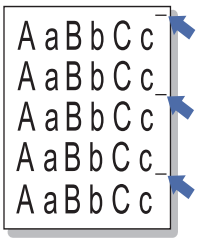	If marks repeatedly appear on the printed side of the page at even intervals: • The print cartridge may be damaged; run a few prints through the machine and if you still have the problem, remove the print cartridge and install a new one. (See Replacing the Print Cartridge.) • Parts of the machine may have toner on them. If the defects occur on the back of the page, the problem will likely correct itself after a few more pages. • The fusing assembly may be damaged. Contact a service representative.
Background scatter 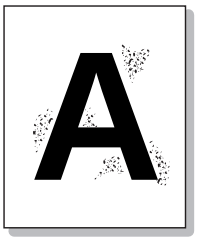	Background scatter results from bits of toner randomly distributed on the printed page. • The paper may be too damp. Load a new batch of paper. Do not open packages of paper until necessary so that the paper does not absorb too much moisture. • If background scatter occurs on an envelope, change the printing layout to avoid printing over areas that have overlapping seams on the reverse side. Printing on seams can cause problems. • If background scatter covers the entire surface area of a printed page, adjust the print resolution through your software application or using the printer driver options. (See Print Procedure.)
Misformed characters 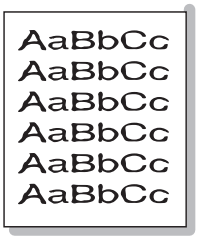	• If characters are improperly formed and producing hollow images, the paper stock may be too slick. Try different paper. (See Media Guidelines.)
Page skew 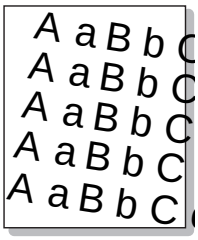	• Ensure that the paper is loaded properly. • Check the paper type and quality. (See Media Guidelines.) • Ensure that the guides are not too tight or too loose against the paper stack. (See Loading Paper.)
Wrinkles or creases 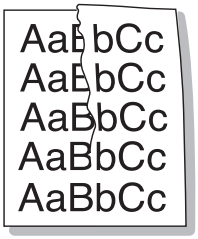	• Ensure that the paper is loaded properly. • Check the paper type and quality. (See Media Guidelines.) • Turn the stack of paper over in the tray. Also try rotating the paper 180 degrees in the tray.

Condition	Suggested Solutions
Back of printouts are dirty 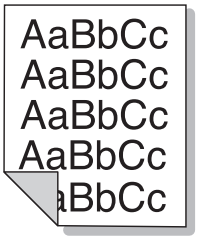	Check for leaking toner. Clean the inside of the machine. (See **Cleaning the Machine**.)
Solid Black pages 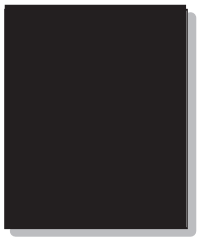	• The print cartridge may not be installed properly. Remove the cartridge and reinsert it. • The print cartridge may be defective. Remove the print cartridge and install a new one. (See Replacing the Print Cartridge.) • The machine may require repair. Contact a service representative.
Loose toner 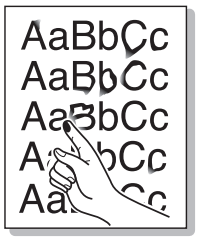	• Clean the inside of the machine. (See Cleaning the Machine.) • Check the paper type and quality. (See Media Guidelines.) • Remove the print cartridge and install a new one. (See Replacing the Print Cartridge.) • The machine may require repair. Contact a service representative.
Character Voids 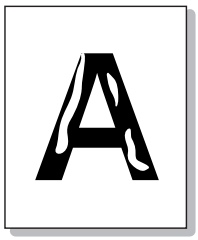	Character voids are white areas within parts of characters that should be solid black: • If you are using transparencies, try another type of transparency. Because of the composition of transparencies, some character voids are normal. • You may be printing on the wrong surface of the paper. Remove the paper and turn it around. • The paper may not meet paper specifications. (See Media Guidelines.)
Horizontal stripes 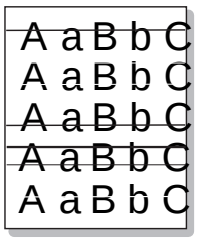	If horizontally aligned black lines, stripes, streaks or smears appear: • The print cartridge may not be installed properly. Remove the cartridge and reinsert it. • The print cartridge may be defective. Remove the print cartridge and install a new one. (See Replacing the Print Cartridge.) • If the problem persists, the machine may require repair. Contact a service representative.

Condition	Suggested Solutions
Curl 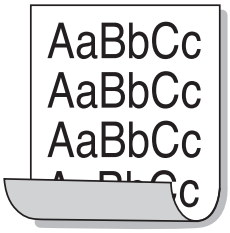	If the printed paper is curled or paper does not feed into the machine: • Ensure that the paper is loaded properly. • Check the paper type and quality. Both high temperature and humidity can cause paper curl. (See Media Guidelines.) • Turn the stack of paper over in the tray. Also try rotating the paper 180° in the tray. • Change the printer option and try again. Go to **Printing Preferences**, click **Paper** tab, and set type to **Thin**.
An unknown image repetitively appears on a few sheets, or loose toner, light print, or contamination occurs.	• Your machine is probably being used at an altitude of 1,500 m (4,921 ft) or above. The high altitude may affect the print quality, such as loose toner or light imaging. Change to the correct altitude setting for your machine.

Common Windows Problems

Condition	Suggested Solutions
"File in Use" message appears during installation.	• Exit all software applications. Remove all software from the printer's startup group, then restart Windows. Re-install the printer driver.
"General Protection Fault", "Exception OE", "Spool 32", or "Illegal Operation" messages appear.	• Close all other applications, reboot Windows and try printing again.
"Fail To Print", "A printer timeout error occurred" messages appear.	• These messages may appear during printing. Just keep waiting until the machine finishes printing. If the message appears in standby mode or after printing has been completed, check the connection and/or whether an error has occurred.

Note: Refer to the Microsoft Windows User Guide supplied with your computer for further information on Windows error messages.

Common Macintosh Problems

Condition	Suggested Solutions
The machine does not print PDF files correctly. Some parts of graphics, text, or illustrations are missing.	• Printing the PDF file as an image may enable the file to print. Turn on **Print As Image** from the Acrobat printing options. Note: It will take longer to print when you print a PDF file as an image.
The document has printed, but the print job has not disappeared from the spooler in Mac OS X10.3.2.	• Update your MAC OS to OS X 10.5 or higher.
Some letters are not displayed normally during the cover page printing.	• Mac OS cannot create the font during the cover page printing. The English alphabet and numbers are displayed normally on the cover page.
When printing a document in Macintosh with Acrobat Reader 6.0 or higher, colors print incorrectly.	• Make sure that the resolution setting in your machine driver matches the one in Acrobat Reader.

Note: Refer to the Macintosh User Guide supplied with your computer for further information on Macintosh error messages.

Common Linux Problems

Condition	Suggested Solutions
The machine does not print.	• Check if the printer driver is installed on your system. Open the Unified Driver Configurator and switch to the **Printers** tab in the **Printers configuration** window to look at the list of available machines. Make sure that your machine is displayed on the list. If not, open the **Add new printer wizard** to set up your machine. • Check if the machine is started. Open the **Printers configuration** window and select your machine from the printer list. Look at the description in the **Selected printer** pane. If its status contains **Stopped**, press the **Start** button. Normal operation of the machine should be restored. The "stopped" status might be activated if problems in printing occurred. For instance, this could be an attempt to print a document when the port is being used by a scanning application. • Ensure the port is not busy. Since functional components of the machine (printer and scanner) share the same I/O interface (port), simultaneous access of different "consumer" applications to the same port is possible. To avoid possible conflicts, only one of them at a time is allowed to gain control over the machine. The other "consumer" will encounter a "device busy" response. You should open the **Ports Configuration** window and select the port assigned to your machine. In the **Selected port** pane you can see if the port is occupied by some other application. If this is the case, you should either wait for completion of the current job or press the **Release port** button. • Check if your application has a special print option such as "-oraw". If "-oraw" is specified in the command line parameter, then remove it to print properly. For Gimp front-end, select the "print" -> "Setup printer" and edit command line parameters in the command item. • The CUPS (Common Unix Printing System) version distributed with SuSE Linux 9.2 (cups-1.1.21) has a problem with ipp (Internet Printing Protocol). Use the socket printing instead of ipp or install a later version of CUPS (cups-1.1.22 or higher).
The machine does not print whole pages, and output is printed on half the page.	• It is a known problem that occurs on version 8.51 or earlier of Ghostscript, 64-bit Linux OS.The problem is solved in AFPL Ghostscript v. 8.52 or above. Download the latest version of AFPL Ghostscript from http://sourceforge.net/projects/ghostscript/ and install it to solve this problem.
Error message "Cannot open port device file" displays when printing a document.	• Avoid changing print job parameters (via LPR GUI, for example) while a print job is in progress. Known versions of CUPS server break the print job whenever print options are changed and then try to restart the job from the beginning. Since Unified Linux Driver locks the port while printing, the abrupt termination of the driver keeps the port locked and unavailable for subsequent Print jobs. If this situation occurs, try to release the port by selecting **Release port** in **Port configuration** window.

Note: Refer to the Linux User Guide supplied with your computer for further information on Linux error messages.

Further Assistance

For any additional help visit our customer web site at www.xerox.com or contact the Xerox Support Center quoting the machine serial number.

Locating the Serial Number

The serial number can be found:

- On the machine's data plate on the rear cover.
- On the Configuration report. See instructions below to print the report.

Printing Configuration Report

To print a Configuration report which provides information about your machine setup, including the serial number, IP Address, installed settings, and the software version:

1. Start from Ready mode. If machine is in Power Saver mode, bring it to **Ready** mode by pressing the **Power** button.
2. Press and hold the **WPS** button on the printer control panel for about 10 seconds until the status LED blinks, stops blinking, and starts blinking again. Release the button when the green light starts blinking the second time.

Specifications

8

This chapter includes:

- Machine Specifications
- Print Specifications
- Network Environment
- System Requirements
- Electrical Specifications
- Environmental Specifications

Machine Specifications

Machine Configurations

Component	Phaser 3020BI
Machine Function	Printing
Hardware Configuration	600 mHz Processor 128 MB Memory Paper Tray
Connectivity	High Speed USB 2.0 Wireless Network
Machine Size (width x depth x height)	13.0 x 8.5 x 7.4 inches (331 x 215 x 188 mm)
Machine Weight Net (with consumables)	7.43 lbs (3.37 kg)
Access	From the front
First Print Out Time	Less than 8.5 seconds from Ready Less than 19 seconds from Power Save
Warm Up Time	Less than 30 seconds from Power Save

Print Specifications

Feature	Phaser 3020BI
Speed: Simplex	Up to 21 ppm on Letter Up to 20 ppm on A4
Maximum Print Area	8.5 x 14 inches US Legal (216 mm x 356 mm)
Maximum Print Resolution	Up to 600 x 600 true dpi Up to 1200 x 1200 dpi effective output
Average Print Cartridge Yield	1500 prints, standard pages Prints from the Print Cartridge supplied with the machine: 700 standard pages
Standard Printer Memory	128 MB
Compatibility	Windows PC / MAC / Linux
Printer Language	GDI

Media Specifications

Input Capacities

Feature	Phaser 3020BI
Capacity: Paper Tray	150 sheets 20 lb (80 g/m²) bond paper 10 sheets Special paper: Envelope, Labels, Cardstock, Thick
Media Weights	16 - 43 lb (60 to 163 g/m²)
Media Sizes	Length: min: 5 inches (127 mm); max: 14 inches (356 mm) Width: min: 3 inches (76 mm); max: 8.5 inches (216 mm) A4, A5, Letter, Legal, Folio, Oficio, Executive, ISO B5, JIS B5, Envelope (Monarch, Com 10, DL, C5), Custom
Media Types	Plain Paper, Thin, Thick, Recycled, Bond, Cardstock, Labels, Envelope, Cotton, Color, Preprinted, Archive

Output Tray

Feature	Phaser 3020BI
Capacity: Output Tray	100 sheets of 20 lb (80 g/m²) bond paper Delivered face down

Network Environment

Item	Phaser 3020BI
Network interface	• High speed USB 2.0 • 802.11b/g/n Wireless LAN
Network operating system	• Windows 7/ Windows 8 / Windows Server 2003 / Server 2008, 2008 R2 / XP / Vista / • Various Linux OS • Mac OS X 10.5 ~ 10.9
Network protocols	• TCP/IPv4, TCP/IPv6 • DHCP, BOOTP, AutoIP • DNS, WINS, DDNS • Rendezvous/Bonjour, SLP, UPnP (SSDP) • Standard TCP/IP Printing, LPR, IPP, WSD, SetIP • SNMP v 1/2c/3, HTTP

System Requirements

Microsoft® Windows®

Operating System	CPU	RAM	Free HDD Space
Windows Server® 2003 (32/64 bit)	Intel® Pentium® III 933 MHz (Pentium IV 1 GHz)	128 MB (512 MB)	1.25 GB to 2 GB
Windows Server® 2008 (32/64 bit)	Intel® Pentium® IV 1 GHz (Pentium IV 2 GHz)	512 MB (2 GB)	10 GB
Windows Vista® (32/64 bit)	Intel® Pentium® IV 3 GHz	512 MB (1 GB)	15 GB
Windows® 7, Windows® 8 (32/64 bit)	Intel® Pentium® IV 1 GHz 32-bit or 64-bit processor or higher	1 GB (2 GB)	16 GB
	• Support for DirectX® 9 graphics with 128 MB memory (to enable the Aero theme). • DVD-R/W Drive		
Windows Server® 2008 R2 (32/64 bit)	Intel® Pentium® IV 1 GHz (x86) or 1.4 GHz (x64) processors (2 GHz or faster)	512 MB (2 GB)	10 GB
Windows® XP (32/64 bit)	Intel® Pentium® III 933 MHz (Pentium IV 1 GHz)	128 MB (256 MB)	1.5 GB
Notes:	• Internet Explorer 6.0 or higher is the minimum requirement for all Windows operating systems. • Users who have administrator rights can install the software. • Windows Terminal Services is compatible with your machine.		

Macintosh

Operating System	CPU	RAM	Free HDD Space
Mac OS X 10.5	Intel® processors 867 MHz or faster PowerPC G4 / G5	512 MB (1 GB)	1 GB
Mac OS X 10.6	Intel® processors	1 GB (2 GB)	1 GB
Mac OS X 10.7 - 10.9	Intel® processors	2 GB	4 GB

Linux

Operating System	CPU	RAM	Free HDD Space
• Fedora 11-19 • OpenSuSE® 11.0, 11.1, 11.2, 11.3, 11.4, 12.1, 12.2, 12.3 • Ubuntu 10.04, 10.10, 11.04, 11.10, 12.04, 12.10, 13.04 • Debian 5.0, 6.0, 7.0, 7.1 • Redhat® Enterprise Linux 5, 6 • SuSE Linux Enterprise Desktop 10, 11 • Mint 13, 14, 15	Pentium IV 2.4GHz (Intel Core™2)	512 MB (1 GB)	1 GB (2 GB)

Electrical Specifications

Feature	Phaser 3020BI
Electrical Voltage	Low voltage: 110 - 127 VAC High voltage: 220 - 240 VAC
Frequency	For low voltage: 60 Hz For high voltage: 50 Hz / 60 Hz +/- 3 Hz
Average Power Consumption	Operating Average: Less than 350 Watts Power Save mode: Less than 2.8 Watts Stand By mode: Less than 40 Watts Off mode: 0.7 Watts

Environmental Specifications

Feature	Phaser 3020BI
Operating Temperature - both printer and consumables	Between 10 - 32 degrees C (50 - 90 degrees F)
Relative Humidity	Acceptable Humidity range: 10 - 80 % Optimal humidity range: 20 - 70 % Optimal relative humidity at 28 degrees C (82 F) Note: Under extreme environmental conditions, such as 10 C and 80 % relative humidity, defects can occur due to condensation.
Elevation	For optimum performance, use the printer at elevations below 3100 M (10,170 ft.).

Safety

9

This chapter includes:

- Electrical Safety
- Operational Safety
- Maintenance Safety
- Environmental, Health, and Safety Contact Information

Your printer and the recommended supplies have been designed and tested to meet strict safety requirements. Attention to the following information ensures the continued safe operation of your Xerox printer.

Electrical Safety

General Guidelines

WARNING: Unauthorized alterations, which may include the addition of new functions or connection of external machines, may impact the machine certification. Please contact your Xerox representative for more information.

- Do not push objects into slots or openings on the printer. Touching a voltage point or shorting out a part could result in fire or electric shock.
- Do not remove the covers or guards that are fastened with screws unless you are installing optional equipment and are instructed to do so. Turn off the printer when performing these installations. Disconnect the power cord when removing covers and guards for installing optional equipment. Except for user-installable options, there are no parts that you can maintain or service behind these covers.

The following are hazards to your safety:

- The power cord is damaged or frayed.
- Liquid is spilled into the printer.
- The printer is exposed to water.
- The printer emits smoke, or the surface is unusually hot.
- The printer emits unusual noise or odors.
- The printer causes a circuit breaker, fuse, or other safety device to activate.

If any of these conditions occur, do the following:

1. Turn off the printer immediately.
2. Disconnect the power cord from the electrical outlet.
3. Call an authorized service representative.

Power Cord

Use the power cord supplied with your printer.

- Plug the power cord directly into a properly grounded electrical outlet. Ensure that each end of the cord is connected securely. If you do not know if an outlet is grounded, ask an electrician to check the outlet.

WARNING: To avoid risk of fire or electrical shock, do not use extension cords, power strips, or power plugs for more than 90 days. When a permanent outlet receptacle cannot be installed, use only one factory-assembled extension cord of the appropriate gauge per printer or multifunction printer. Always adhere to national and local building, fire, and electrical codes regarding length of cord, conductor size, grounding, and protection.

- Do not use a ground adapter plug to connect the printer to an electrical outlet that does not have a ground connection terminal.

- Verify that the printer is plugged into an outlet that is providing the correct voltage and power. Review the electrical specification of the printer with an electrician if necessary.
- Do not place the printer in an area where people can step on the power cord.
- Do not place objects on the power cord.
- Do not plug or unplug the power cord while the power switch is in the On position.
- If the power cord becomes frayed or worn, replace it.
- To avoid electrical shock and damage to the cord, grasp the plug when unplugging the power cord.

The power cord is attached to the printer as a plug-in device on the back of the printer. If it is necessary to disconnect all electrical power from the printer, disconnect the power cord from the electrical outlet.

Emergency Turn Off

If any of the following conditions occur, turn off the printer immediately and disconnect the power cord from the electrical outlet. Contact an authorized Xerox service representative to correct the problem if:

- The equipment emits unusual odors or makes unusual noises.
- The power cable is damaged or frayed.
- A wall panel circuit breaker, fuse, or other safety device has been tripped.
- Liquid is spilled into the printer.
- The printer is exposed to water.
- Any part of the printer is damaged.

Laser Safety

This printer complies with laser product performance standards set by governmental, national, and international agencies and is certified as a Class 1 Laser Product. The printer does not emit hazardous light because the beam is totally enclosed during all modes of customer operation and maintenance.

WARNING: Use of controls, adjustments, or performance of procedures other than those specified in this manual can result in hazardous radiation exposure.

Operational Safety

Your printer and supplies were designed and tested to meet strict safety requirements. These include safety agency examination, approval, and compliance with established environmental standards.

Your attention to the following safety guidelines helps to ensure the continued, safe operation of your printer.

Operational Guidelines

- Do not remove any paper trays while the printer is printing.
- Do not open the doors when the printer is printing.
- Do not move the printer when it is printing.
- Keep hands, hair, neckties, and so on, away from the exit and feed rollers.
- Covers, which require tools for removal, protect the hazard areas within the printer. Do not remove the protective covers.

Ozone Release

This printer produces ozone during normal operation. The amount of ozone produced is dependent on copy volume. Ozone is heavier than air and is not produced in amounts large enough to harm anyone. Install the printer in a well-ventilated room.

For more information in the United States and Canada, go to www.xerox.com/environment. In other markets, please contact your local Xerox representative or go to www.xerox.com/environment_europe.

If you need additional information about ozone, please request the Xerox publication Facts About Ozone (part number 610P64653) by calling 1-800-828-6571 in the United States and Canada. In other markets, contact your local Xerox representative.

Printer Location

- Place the printer on a level, solid, non-vibrating surface with adequate strength to hold its weight. To find the weight for your printer configuration, see Machine Specifications.
- Do not block or cover the slots or openings on the printer. These openings are provided for ventilation and to prevent overheating of the printer.
- Place the printer in an area where there is adequate space for operation and servicing.
- Place the printer in a dust-free area.
- Do not store or operate the printer in an extremely hot, cold, or humid environment.
- Do not place the printer near a heat source.
- Do not place the printer in direct sunlight to avoid exposure to light-sensitive components.
- Do not place the printer where it is directly exposed to the cold air flow from an air conditioning system.
- Do not place the printer in locations susceptible to vibrations.

- For optimum performance, use the printer at the elevations specified in Environmental Specifications.

Printer Supplies

- Use the supplies designed for your printer. The use of unsuitable materials can cause poor performance and a possible safety hazard.
- Follow all warnings and instructions marked on, or supplied with, the product, options, and supplies.
- Store all consumables in accordance with the instructions given on the package or container.
- Keep all consumables away from the reach of children.
- Never throw toner, print/drum cartridges, or toner containers into an open flame.
- When handling cartridges, for example toner and such, avoid skin or eye contact. Eye contact can cause irritation and inflammation. Do not attempt to disassemble the cartridge, which can increase the risk of skin or eye contact.

CAUTION: Use of non-Xerox supplies is not recommended. The Xerox Warranty, Service Agreement, and Total Satisfaction Guarantee do not cover damage, malfunction, or degradation of performance caused by use of non-Xerox supplies, or the use of Xerox supplies not specified for this printer. The Total Satisfaction Guarantee is available in the United States and Canada. Coverage could vary outside these areas. Contact your Xerox representative for details.

Maintenance Safety

- Use supplies and cleaning materials only as directed in the Maintenance section of this manual.
- Do not remove covers or guards that are fastened with screws. There are no parts behind these covers that you can maintain or service.
- Do not attempt any maintenance procedure that is not specifically described in the documentation supplied with your printer.
- Clean with a dry lint-free cloth only.

WARNING: Aerosol cleaners can be explosive or flammable when used on electromechanical equipment.

- Do not burn any consumables or routine maintenance items. For information on Xerox supplies recycling programs, go to www.xerox.com/gwa.

Printer Symbols

Symbol	Description
	Warning: Indicates a hazard which, if not avoided, could result in death or serious injury.
	Caution: Indicates a mandatory action to take in order to avoid damage to the property.
	Hot surface on or in the printer. Use caution to avoid personal injury.
	Do not burn the item.
00:10	Do not expose the imaging unit to light for more than 10 minutes.
	Do not expose the imaging unit to direct sunlight.

Symbol	Description
	Do not touch the part or area of the printer.
175˚C 347˚F 00:40[00]	Warning: Wait for the printer to cool for the specified time before touching the fuser.
	This item can be recycled. For details, see Recycling and Disposal.

Environmental, Health, and Safety Contact Information

For more information on Environment, Health, and Safety in relation to this Xerox product and supplies, contact the following customer help lines:

United States: 1-800 ASK-XEROX

Canada: 1-800 ASK-XEROX

Europe: +44 1707 353 434

For product safety information in the United States, go to www.xerox.com/environment.

For product safety information in Europe, go to www.xerox.com/environment_europe.

Regulatory

10

This chapter includes:

- Basic Regulations
- Material Safety Data

Basic Regulations

Xerox has tested this device to electromagnetic emission and immunity standards. These standards are designed to mitigate interference caused or received by this device in a typical office environment.

United States (FCC Regulations)

This device has been tested and found to comply with the limits for a Class A digital device, pursuant to Part 15 of the FCC Rules. These limits are designed to provide reasonable protection against harmful interference in a commercial environment. This device generates, uses, and can radiate radio frequency energy. If it is not installed and used in accordance with these instructions, it may cause harmful interference to radio communications. Operation of this device in a residential area is likely to cause harmful interference in which case the user will be required to correct the interference at his/her own expense.

If this device does cause harmful interference to radio or television reception, which can be determined by turning the device off and on, the user is encouraged to try to correct the interference by one or more of the following measures:

- Reorient or relocate the receiver.
- Increase the separation between the equipment and receiver.
- Connect the equipment into an outlet on a circuit different from that to which the receiver is connected.
- Consult the dealer or an experienced radio/television technician for help.

Changes or modifications to this equipment not approved by Xerox can void the authority of the user to operate this equipment.

Note: To ensure compliance with Part 15 of the FCC rules, use shielded interface cables.

Canada

This Class A digital apparatus complies with Canadian ICES-003.

Cet appareil numérique de la classe A est conforme à la norme NMB-003 du Canada.

European Union

CAUTION: This is a Class A product. In a domestic environment, this product can cause radio interference in which case the user could be required to take adequate measures.

The CE mark applied to this device symbolizes Xerox's declaration of conformity with the following applicable Directives of the European Union as of the dates indicated:

- December 12, 2006: Low Voltage Directive 2006/95/EC
- December 15, 2004: Electromagnetic Compatibility Directive 2004/108/EC
- March 9, 1999: Radio & Telecommunications Terminal Equipment Directive 1999/5/EC

This printer, if used properly in accordance with the user's instructions, is not dangerous for the consumer or for the environment.

To ensure compliance with European Union regulations, use shielded interface cables.

A signed copy of the Declaration of Conformity for this device can be obtained from Xerox.

European Union Lot 4 Imaging Equipment Agreement Environmental Information

Environmental Information Providing Environmental Solutions and Reducing Cost

Introduction

The following information has been developed to assist users and has been issued in relation to the European Union (EU) Energy Related Products Directive, specifically the Lot 4 study on Imaging Equipment. This requires manufacturers to improve environmental performance of in scope products and supports the EU action plan on energy efficiency.

In scope products are Household and Office equipment that meet the following criteria.

- Standard monochrome format products with a maximum speed less than 66 A4 images per minute
- Standard color format products with a maximum speed less than 51 A4 images per minute

Environmental Benefits of Duplex Printing

Most Xerox products have duplex printing, also known as 2-sided printing, capability. This enables you to print on both sides of the paper automatically, and therefore helps to reduce the use of valuable resources by reducing your paper consumption. The Lot 4 Imaging Equipment agreement requires that on models greater than or equal to 40 ppm color or greater than or equal to 45 ppm monochrome the duplex function has been auto enabled, during the setup and driver installation. Some Xerox models below these speed bands may also be enabled with 2-sided printing settings defaulted on at the time of install. Continuing to use the duplex function will reduce the environmental impact of your work. However, should you require simplex/1-sided printing, you may change the print settings in the printer driver.

Paper Types

This product can be used to print on both recycled and virgin paper, approved to an environmental stewardship scheme, which complies with EN12281 or a similar quality standard. Lighter weight paper (60 g/m^2), which contains less raw material and thus save resources per print, may be used in certain applications. We encourage you to check if this is suitable for your printing needs.

Power Consumption and Activation Time

The amount of electricity a product consumes depends on the way the device is used. This product is designed and configured to enable you to reduce your electricity costs. After the last print, the device switches to Ready mode. In this mode, the device can print again immediately if required. If the

product is not used for a period of time, the device switches to a Power Saver mode. In these modes, only essential functions remain active in order to enable reduced product power consumption.

Upon exiting from Power Saver Mode, the first print will take slightly longer than in Ready Mode. This delay is the result of the system waking up from Power Saver mode and is typical of most imaging products on the market.

If you wish to set a longer Activation Time or would like to completely deactivate the Power Save Mode, please consider that this device may then only switch to a lower energy level after a longer period of time or not at all.

To learn more about Xerox participation in sustainability initiatives, please visit our Web site at: www.xerox.com/about-xerox/environment/enus.html.

For additional information on energy or other related topics, please visit: www.xerox.com/about-xerox/environment/enus.html or www.xerox.co.uk/about-xerox/environment/engb.html.

Germany

Blendschutz

Das Gerät ist nicht für die Benutzung im unmittelbaren Gesichtsfeld am Bildschirmarbeitsplatz vorgesehen. Um störende Reflexionen am Bildschirmarbeitsplatz zu vermeiden, darf dieses Produkt nicht im unmittelbaren Gesichtsfeld platziert werden.

Larmemission

Maschinenlärminformatians-Verordnung3 . GPSGV: Der höchste Schalldruckpegel beträgt 70 dB(A) oder weniger gemäß EN ISO 7779.

Importeur

Xerox GmbH
Hellersbergstraße 2-4
41460 Neuss
Deutschland

Turkey RoHS Regulation

In compliance with Article 7 (d). We hereby certify:

"It is compliant with the EEE Regulation."

“EEE yönetmeliğine uygundur.”

Regulatory information for 2.4 Ghz Wireless LAN Module

This product contains a 2.4 Ghz Wireless LAN radio transmitter module which complies with the requirements specified in FCC Part 15, Industry Canada RSS-210 and European Council Directive 99/5/EC.

Operation of this device is subject to the following two conditions: (1) this device may not cause harmful interference, and (2) this device must accept any interference received, including interference that may cause undesired operation.

Changes or modifications to this device not specifically approved by the Xerox Corporation may void the user's authority to operate this equipment.

Material Safety Data

For Material Safety Data information regarding your printer, go to:

North America: www.xerox.com/msds

European Union: www.xerox.com/environment_europe

For the Customer Support Center phone numbers, go to www.xerox.com/office/worldcontacts

Recycling and Disposal 11

This chapter includes recycling and disposal information for:

- All Countries
- North America
- European Union
- Other Countries

All Countries

If you are managing the disposal of your Xerox product, please note that the printer may contain lead, mercury, perchlorate, and other materials whose disposal may be regulated due to environmental considerations. The presence of these materials is fully consistent with global regulations applicable at the time that the product was placed on the market. For recycling and disposal information, contact your local authorities.

Perchlorate Material

This product may contain one or more Perchlorate-containing devices, such as batteries. Special handling may apply. Please see www.dtsc.ca.gov/hazardouswaste/perchlorate.

North America

Xerox operates an equipment take-back and reuse/recycle program. Contact your Xerox representative (call 1-800-ASK-XEROX) to determine if this Xerox product is part of the program.

For more information about Xerox environmental programs, visit www.xerox.com/environment, or for local recycling and disposal information, contact your local authorities.

European Union

Some equipment may be used in both a domestic/household and a professional/business application.

Domestic/Household Environment

Application of this symbol on your equipment is confirmation that you should not dispose of the equipment in the normal household waste stream.

In accordance with European legislation, end of life electrical and electronic equipment subject to disposal must be segregated from household waste. Private households within EU member states may return used electrical and electronic equipment to designated collection facilities free of charge. Please contact your local disposal authority for information. In some member states, when you purchase new equipment, your local retailer may be required to take back your old equipment free of charge. Please ask your retailer for information.

Professional/Business Environment

Application of this symbol on your equipment is confirmation that you must dispose of this equipment in compliance with agreed national procedures.

In accordance with European legislation, end of life electrical and electronic equipment subject to disposal must be managed within agreed procedures. Prior to disposal, please contact your local reseller or Xerox representative for end of life take-back information.

Collection and Disposal of Equipment and Batteries

These symbols on the products and/or accompanying documents mean that used electrical and electronic products and batteries should not be mixed with general household waste. For proper treatment, recovery, and recycling of old products and used batteries, please take them to applicable collection points, in accordance with your national legislation and the **Directive 2002/96/EC and 2006/66/EC**.

By disposing of these products and batteries correctly, you will help to save valuable resources and prevent any potential negative effects on human health and the environment which could otherwise arise from inappropriate waste handling.

For more information about collection and recycling of old products and batteries, please contact your local municipality, your waste disposal service, or the point of sale where you purchased the items.

Penalties may be applicable for incorrect disposal of this waste, in accordance with national legislation.

Business Users in the European Union

If you wish to discard electrical and electronic equipment, please contact your dealer or supplier for further information.

Disposal Outside of the European Union

These symbols are only valid in the European Union. If you wish to discard these items, please contact your local authorities or dealer and ask for the correct method of disposal.

Battery Symbol Note

This wheeled bin symbol may be used in combination with a chemical symbol. This establishes compliance with the requirements set out by the Directive.

Battery Removal

Batteries should only be replaced by a MANUFACTURER-approved service facility.

Other Countries

Please contact your local waste management authority to request disposal guidance.

xerox®