November 2012
702P01023

Xerox Nuvera® Production System and Xerox® iGen™ Digital Production Press

Production Media Cart User Guide

Xerox Nuvera® 100/120/144/157 EA Production System
Xerox Nuvera® 100/120/144 MX Production System
Xerox Nuvera® 200/288/314 EA Perfecting Production System
Xerox Nuvera® 200/288 MX Perfecting Production System
Xerox® iGen4® Digital Production Press
Xerox® iGen™ 150 Digital Production Press

©2012 Xerox Corporation. All rights reserved. Xerox®, Xerox and Design®,, iGen4®, iGen™ and Xerox Nuvera® are trademarks of Xerox Corporation in the United States and/or other countries.

C.P. Bourg is the trademark of C.P. Bourg, Inc. Other company trademarks are also acknowledged.

Document Version: 1.0 (October 2012)

BR3143

Contents

Xerox Production Media Cart 1

Features 1

Parts Overview 2

Safety Warnings 4

Safety Signs and Safety Messages 4

Introduction 5

Safety Instructions 5

Pre-operation Inspection 6

Safety Inspection Point List 7

Safety Labels 7

Cleaning 8

Charging 9

Charging in the Media Cart 9

Specifications 11

Operating the Xerox Production Media Cart (Nuvera) 12

Docking the Xerox Production Media Cart with the Xerox Nuvera XPS Stacker 12

Lifting the Stack from the XPS Stacker 15

Transferring the Stack to the CP Bourg BSFEx Air Table 17

Offloading the Stack to a Work Table 19

Offloading the Stack to a Pallet 20

Operating the Xerox Production Media Cart (iGen) 21

Customer Caveat (Paper Stacking) 21

Docking the Xerox Production Media Cart with the Xerox iGen Stacker Pallet with Power Eject Kit 22

Lifting the Stack from the iGen Stacker 25

Transferring the Stack to the CP Bourg BSFEx Air Table 27

Offloading the Stack to a Work Table 29

Offloading the Stack to a Pallet 31

Xerox Production Media Cart

The Production Media Cart is an optional unit that can interface with certain Xerox stackers to assist with transporting printed media from the printer stacker to work tables, pallets, or near-line/offline finishing. The Production Media Cart (Cart) uses a battery powered vertical elevation system to set the media table height and a hand crank to transfer the paper stack from the Cart.

Features

Paper stack pickup:

- The stack can be picked up from the Xerox Production Stacker (XPS)
  - Stack pickup low elevation: 210 mm (8.26 inches)
  - Stack pickup high elevation: 600 mm (23.6 inches)
- The stack can be picked up from the Xerox iGen Stacker
  - Stack pickup elevation: 103 mm (4.06 inches)

Note

Xerox Nuvera Media Cart Enabling Kit pre-installation is required.
iGen Pallet Interface Kit pre-installation is required.
iGen Powered Eject Kit pre-installation is required.

Paper stack unload: The stack is delivered intact horizontally to offline devices, such as the CP Bourg BSFEx Air Table, or transferred to a flat work table or consolidation pallet.

Paper stack clamp: Secures the paper stack to the paper table to maintain stack integrity during transport.

Locking rear casters: Stabilize the Cart while docked with the stacker or while offloading the stack.

Parts Overview

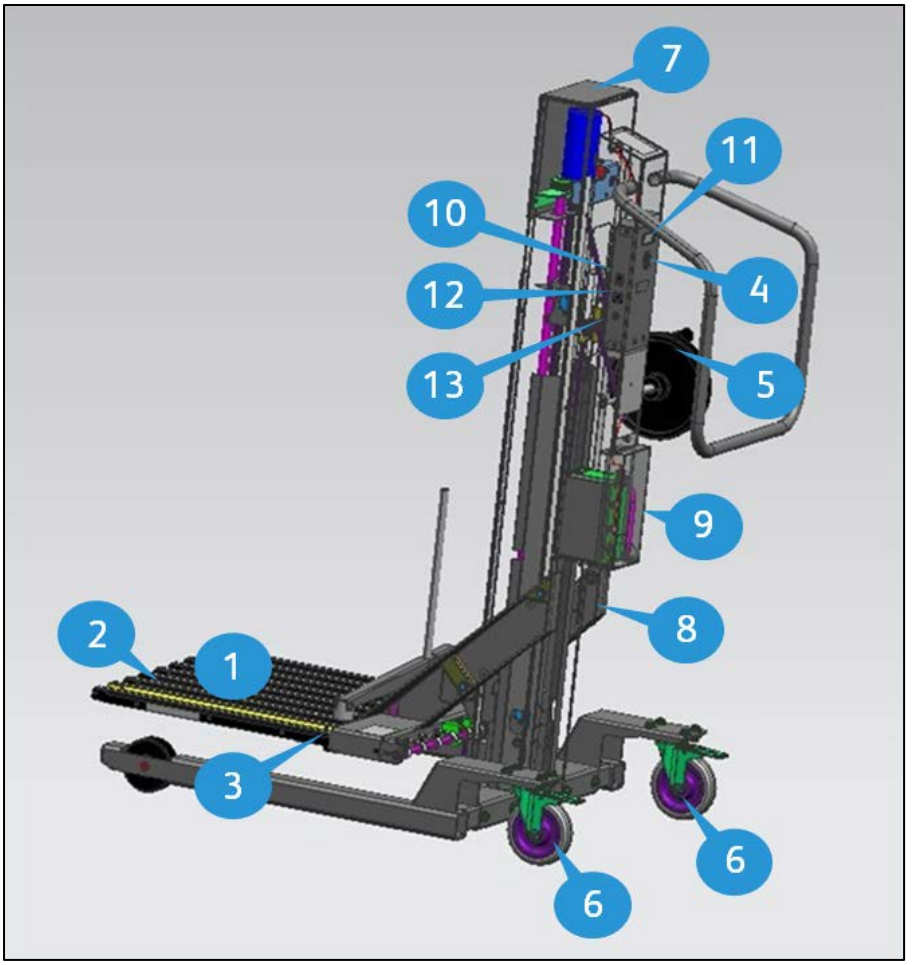

1. **Hands-Off Stack Transfer (HOST):** Activated with the stack transport handle to transfer the paper stack onto a work table.

   Paper table: Bears the paper stack during transport. Tines dock with the stacker for paper stack pickup.
2. **Alignment tine:** Single yellow tine helps position the Cart for docking with the XPS Stacker.
3. **Paper stack clamp:** Keeps the paper stack secure during transport.
4. **Elevation button:** Changes the height at which the paper stack is loaded onto and off of the Cart.
5. **Stack transport handle:** Activates the paper stack transport system to move the paper stack from the Cart onto a work table or other finishing device.
6. **Locking casters:** Lock: Stabilizes the Cart during transfer of the paper stack to and from the Cart. Unlock: Allows the Cart to roll during transport.
7. **Vertical post**
8. **Paper table support:** Joins the paper table to the vertical post.
9. **Battery:** Supplies the power to elevate the paper table.
10. **On/Off switch:** Switches the power to the Cart on or off.

11. **Battery meter:** Shows the voltage of the battery.

12. **Circuit breaker**: If current exceeds 15 amps , circuit breaker will trip and require a reset by operator.
13. **Charging port**: Allows for onboard battery charging.

Battery charger

Power supply cord for battery charger

Safety Warnings

Important

Read and understand the contents of this manual prior to operation. Observe all of the warnings in this manual and the safety labels affixed to the Production Media Cart. Failure to do so may result in property damage, bodily injury, or death.

Safety Signs and Safety Messages

DANGER

This message indicates an imminently hazardous situation which, if not avoided, will result in death or serious injury

CAUTION

This message indicates a potentially hazardous situation which, if not avoided, may result in minor or moderate injury

WARNING

This message indicates a potentially hazardous situation which, if not avoided, could result in death or serious injury.

IMPORTANT

This message is used when special precautions should be taken to ensure a correct action or to avoid damage to or malfunction of the Dock Leveler or a component.

- Improper operation can cause accidents.
- Don’t take chances with incorrect or damaged equipment.
- Read and understand the procedures for safe operation as outlined in this manual.
- Do not hesitate to ask for help.
- Stay alert!
- Follow safety rules, regulations, and procedures.
- Avoid accidents by recognizing dangerous procedures or situations before they occur.

- Safety signs and messages are placed in this manual to provide instructions and identify specific areas where potential hazards exist and special precautions should be taken. Know and understand the meaning of these instructions, signs, and messages.
- Damage to the equipment, death, or serious injury to you or other persons may result if these messages are not followed.
- If warning decals are damaged, they must be replaced. Contact your Xerox service agent for replacements.

Introduction

The following is intended to be a quick reference to some of the important procedures to follow while using the Production Media Cart.

It is not intended to cover, or suggest that it does cover, all procedures required to be followed to ensure safe operation.

Operators should be aware of, and comply with, all local and national regulations that apply to operation of this Production Media Cart. Such regulations are generally issued by national, state, or provincial government agencies authorized by legislation on Health and Safety at Work. Examples of these agencies include:

- US Federal Occupational Safety and Health Administration (OSHA) or its equivalent at the State level
- Canadian and Provincial Ministries of Labour
- UK Health and Safety Executive
- Polish Ministry of Labour and Social Policy
- Agence française de sécurité sanitaire de l'environnement et du travail [France]
- Undesministerium für Arbeit und Soziales (BMAS) [Germany]

Safety Instructions

- For indoor use only.
- Do not operate this Production Media Cart (Cart) unless you have been trained and authorized to do so.
- Do not operate this Cart until you have checked its condition (refer to the Pre-operation Inspection section of this manual).
- Report the need for Cart repairs to your supervisor. Do not operate the Cart until necessary repairs have been made.
- Neglect may cause a minor repair to become a major service problem or cause the Cart to become unsafe.
- This Cart is intended for use on smooth, level surfaces only.
- Do not use on ramps or grades, rough or broken floors.
- Do not lift with the tine tips or one tine only.
- Do not move the Cart without securing the paper stack with the stack clamp.
- Use special care when operating the Cart with paper stacks to avoid tipping, loss of load, or striking personnel or objects.

- Always look in the direction of travel.
- Keep a clear view and when the load obstructs visibility, travel with the load lowered.
- Watch swing clearance when turning near walls, racks, pillars, machinery, or other obstacles.
- Before you leave the Cart, fully lower the paper table and set the caster locks.
- Do not operate the Cart at greater than 3 miles per hour.
- Never stand or sit on the paper table.
- Never sit, stand, lift, or transport any person on the paper table.
- Never use the Cart as a stepladder.
- Never operate the Cart on a moving vehicle.
- Never operate the Cart when any of its parts have been removed.
- Do not wear loose clothing such as ties and scarves, or dangling accessories such as bracelets, when operating the Cart to avoid entanglement.
- Tie back long hair during operation to avoid entanglement.
- Never use or store the Cart in wet environments.
- Do not allow any part of the Cart to get wet.
- Never exceed the Cart load capacity of 160 lb. (72.6 kg) to avoid personal injury and damage to the Cart.
- Never raise or lower the paper table unless the Cart is on a firm, level, even surface and the casters are in the locked position.
- Never use shims or other objects to level the Cart.
- Use extreme caution when raising or lowering the paper table when it is near other objects to avoid personal injury or damage to other objects.
- Never allow any object, including limbs, to go beneath the paper table to avoid personal injury or damage to other objects as the paper table nears the bottom of its range.
- Use caution when lowering the paper table to avoid personal injury or damage to objects that may have come between the paper table and base of the unit.
- Never operate the Cart when the edge of the paper stack is less than 1 inch (25 mm) from the front (loading edge) of the paper table. Keep the stack closer to the vertical post.
- Never tilt the Cart when a paper stack is loaded.

Pre-operation Inspection

Workplace safety regulations require that the Production Media Cart (Cart) be inspected before each shift.

Follow the inspection point list below to complete this check. If anything is found to be wrong with the Cart, then it must be taken out of operation. Do not use a Cart which fails this inspection.

Safety Inspection Point List

1. Safety Equipment
   - Warning labels must be in place and readable.
   - Safety covers and parts must be in place and free of obvious damage.
2. General operation
   - Caster locks: Test the locks for proper braking.
   - Elevation control:
     - Raise the Cart to full height. Listen and watch for unusual sounds or jerky motions.
     - Lower the Cart until it is fully lowered. Listen and watch for unusual sounds or jerky motions.
3. Tines and paper table
   - Inspect the forks for cracks, wear, and alignment. Obvious damage fails inspection.
   - Fork carriage: The carriage is the part of the Cart to which the tines are attached. Inspect the carriage for cracks, damage, or wear.
4. Wheels
   - All casters must be inspected for cuts, breaks, or signs of debonding.
   - Material imbedded in the casters or axles must be removed (i.e., steel shavings, string, plastic wrap, etc.).

Safety Labels

Safety Label	Description
	Warning Read the User Guide and all safety labels affixed to the Cart before use.
	Warning Tipping hazard. Do not stand on the paper table. Keep the paper stack in center of the paper table.
	Warning Do not exceed the 160 lb. (72.6 kg) weight capacity.

	Warning Do not exceed the 25 lb. (11.3 kg) weight capacity on any one tine.
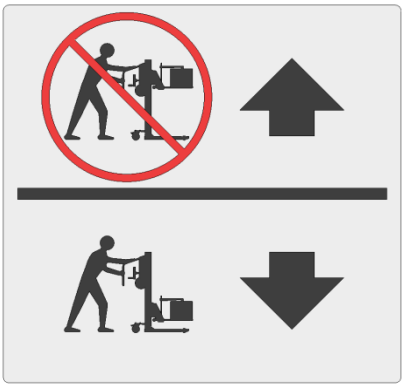	**Warning** Tipping hazard. Do not operate the Cart when the paper table is elevated. Maximum paper table height for moving while loaded is 600 mm (24 inches).

Cleaning

Use a clean cloth to clean the HOST belts. Keep the belts clean, dry and free from debris and dirt.

Charging

Charging in the Media Cart

The Media Cart battery should be charged if the battery meter is outside the green zone on the meter.

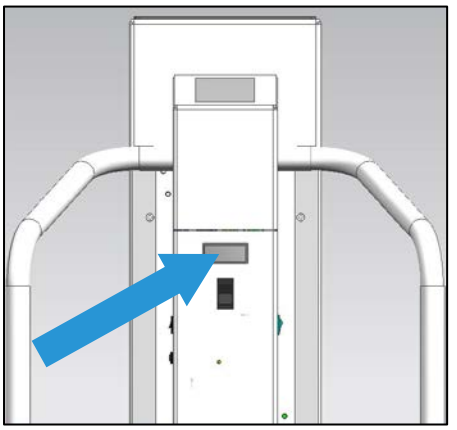

Battery meter

1. Ensure that power to the Media Cart is switched off.

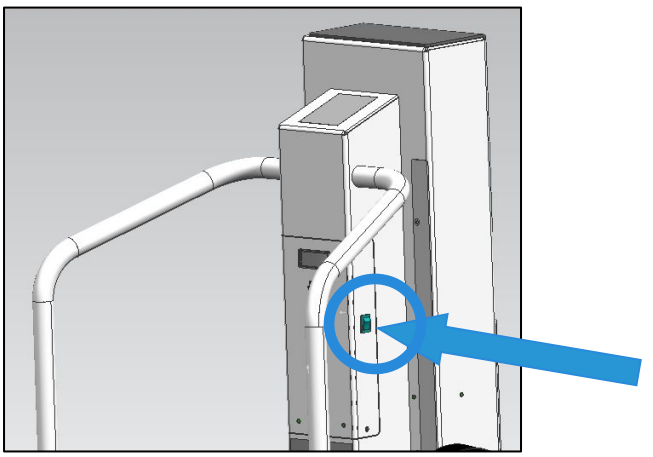

Power switch

2. Connect the battery charger to the battery.

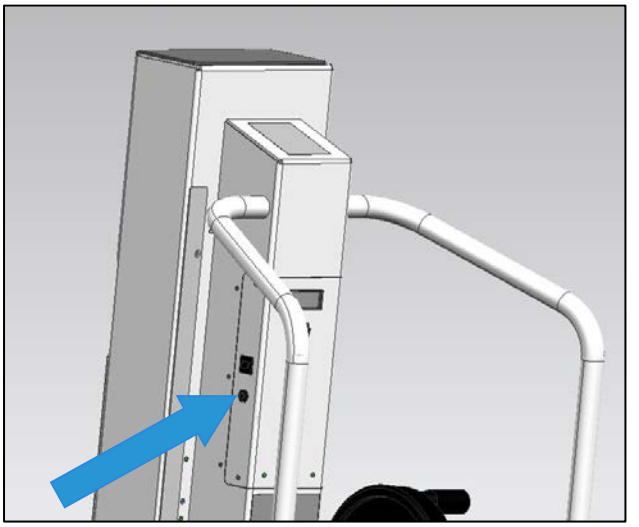

Connect charger here

Battery charger

3. Plug the power cord into the battery charger.

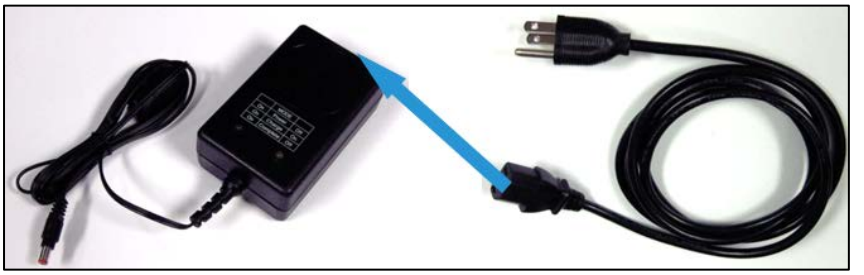

Battery charger **Power cord**

4. Plug the power cord into a proper electrical outlet.
5. Charge the battery for 6-8 hours or until the light on the charger indicates that it is charged.

When light is yellow, system is charging. When light turns green, battery is charged.

Specifications

Production Media Cart size

Length: 43.5 in. (1105 mm)

Width: 33.5 in. (851 mm

Height: 53 in. (1346 mm)

Weight: 165.5 lbs. (75 kg)

Media size

Minimum: 7.0 x 8.0 in. (177.8 x 203.2 mm)

Maximum: 14.33 x 26 in. (364 x 660.4 mm)

Maximum stack capacity

56 gsm – 400 gsm: 270 mm

75 gsm – 2600 sheets

Maximum load capacity

160 lbs. (72.6 kg)

Pickup height

From XPS low: 210 mm (8.26 inches)

From XPS high: 600 mm (23.6 inches)

From iGen: 103 mm (4.06 inches)

Elevation limits

Maximum unload height of stack: 920 mm (36.2 inches)

Minimum unload height of stack: 100 mm (3.9 inches)

Required kit

Install the XPS Media Cart Stacking Surface Kit to enable docking with the XPS Stacker

Install the iGen Pallet Interface Kit
Install the iGen Powered Eject Kit

Operating the Xerox Production Media Cart (Nuvera)

Docking the Xerox Production Media Cart with the Xerox Nuvera XPS Stacker

It is recommended that you first practice docking the Production Media Cart (Cart) without a paper stack loaded.

Warning

Do not exceed the load capacity of 160 lbs. (72.6 kg) to avoid personal injury and damage to the Cart.

1. Position the Cart in front of the XPS Stacker after it has moved out from the printer.

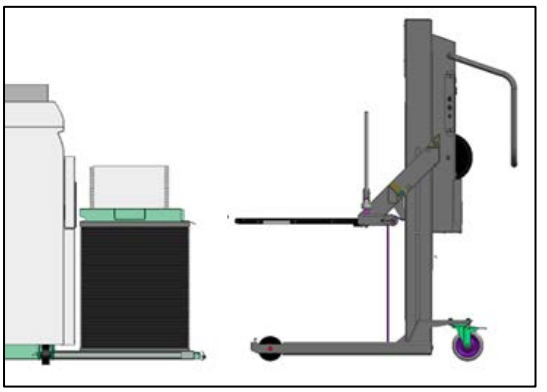

High position

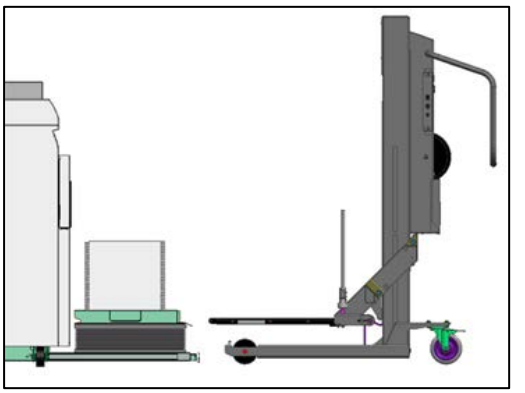

Low position

2. Set the Cart to the appropriate height.
   a. Locate the line on the cart post that corresponds to the stacker height (low: 210 mm; high: 600 mm).
   b. Press the upper or lower part of the elevation button to raise or lower to match the short lines on the sides to the line on the cart post.

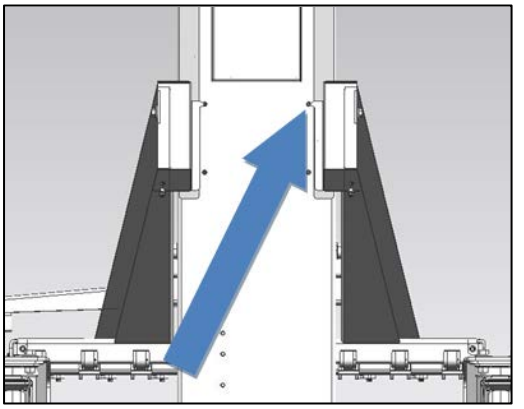

Low position
Line up pointer to hole

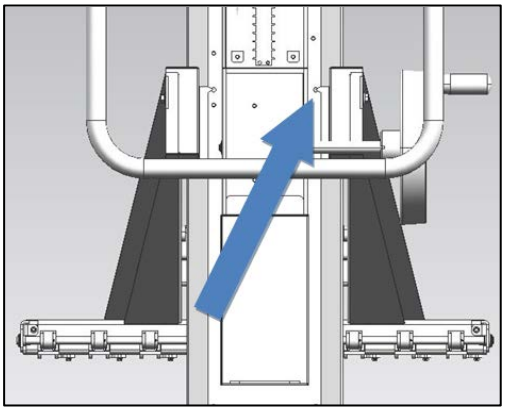

High position
Line up pointer to hole

3. Line up the Cart tines with the XPS tines.

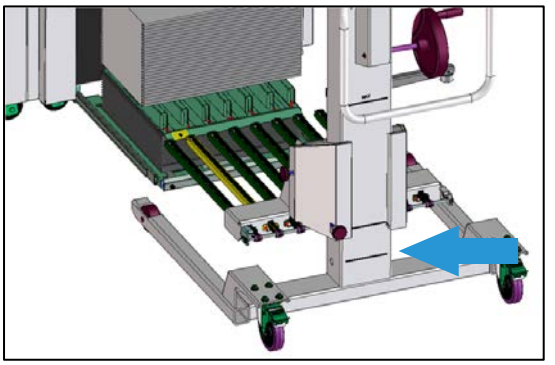

Low position

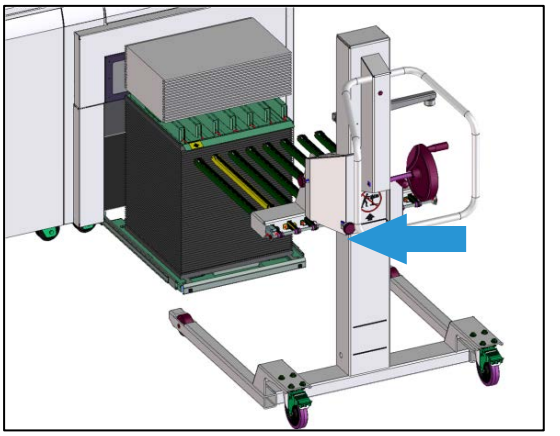

High position

4. Align the colored tine with the arrow on the XPS Stacker.

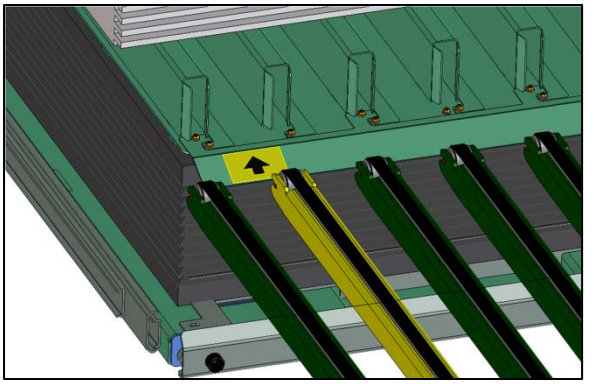

5. Make fine adjustments to the Cart height to ensure that the tines clear the XPS Stacker and the bottom of the paper stack.
6. Move the Cart forward slowly until the black line on the Cart's alignment tine aligns with the black line on the XPS Stacker.

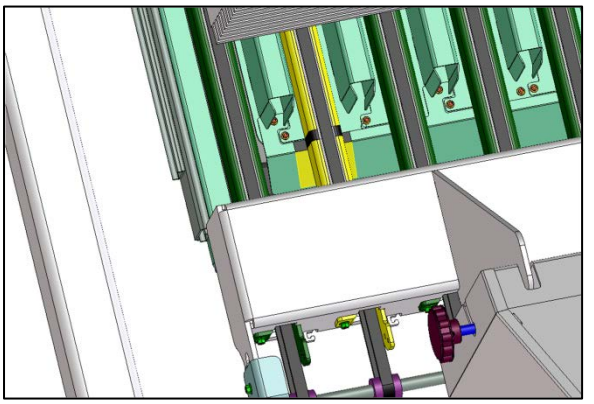

7. Press down on the lock tab on the rear casters to stabilize the Cart.

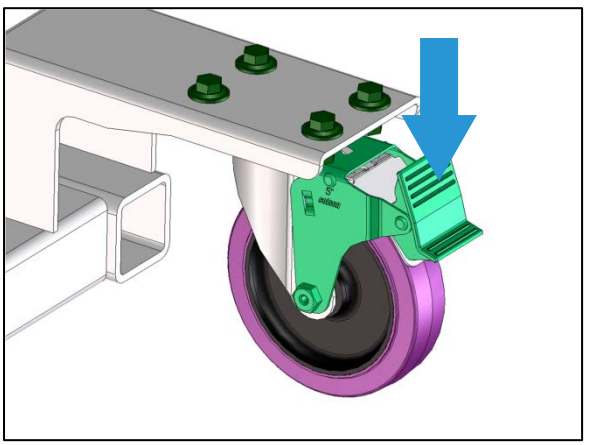

The Cart is now properly docked with the XPS Stacker.

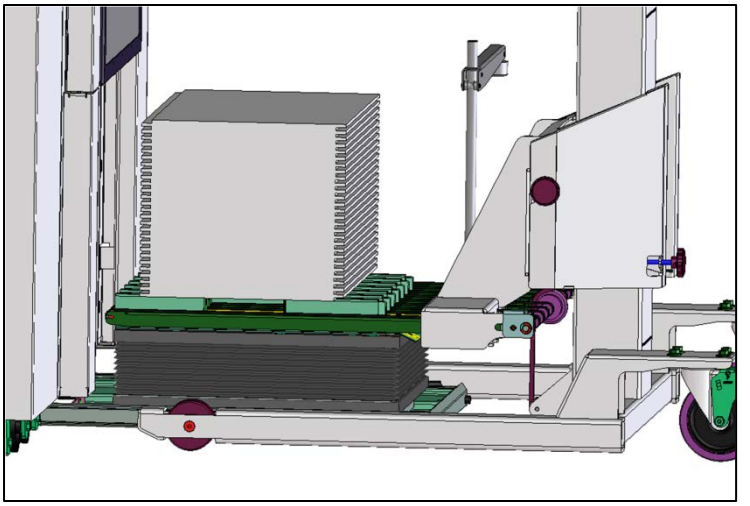

Lifting the Stack from the XPS Stacker

1. Press the upper part of the elevation button to raise the height of the Cart until the bottom of the cart clears the XPS Stacker.

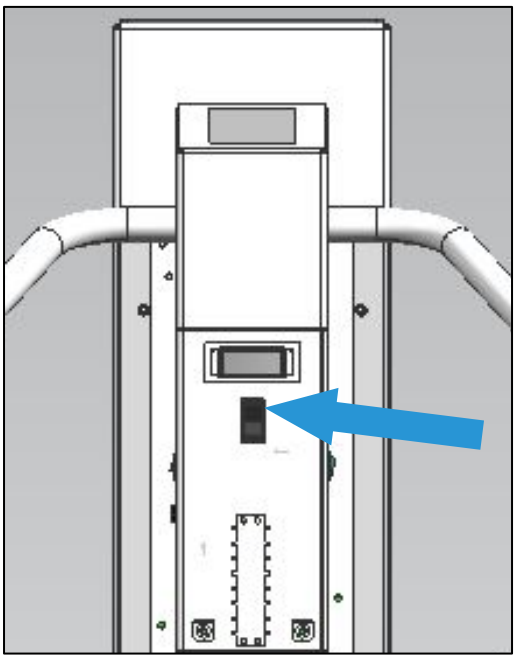

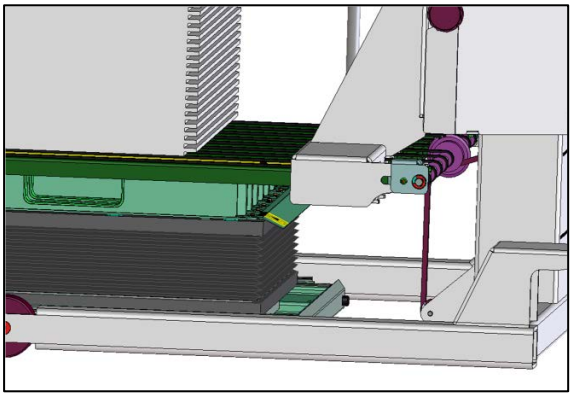

2. Gently lift up on the paper stack clamp near the clamp post to free it for rotation. Lift it high enough so that it will clear the top of the paper stack.

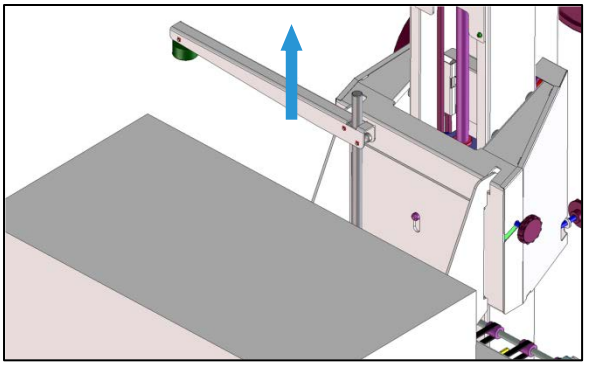

3. Rotate the clamp and position it over the paper stack.

4. Gently press the clamp at the clamp post to secure it.

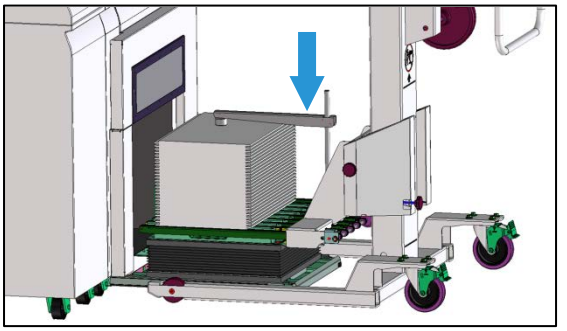

Low position

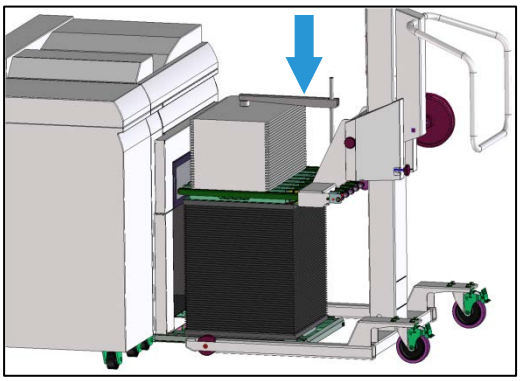

High position

5. Press the tab on the upper part of the caster lock on the rear casters to release them.

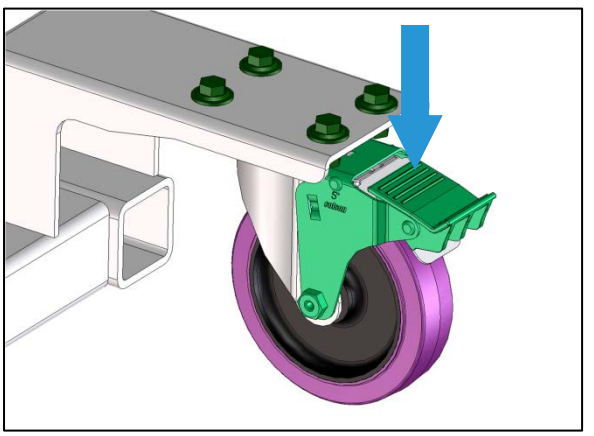

6. Guide the Cart out until it clears the stacker.

Transferring the Stack to the CP Bourg BSFEx Air Table

This procedure assumes pick up from the XPS low position.

1. Position the Cart in front of the CP Bourg BSFEx Air Table.

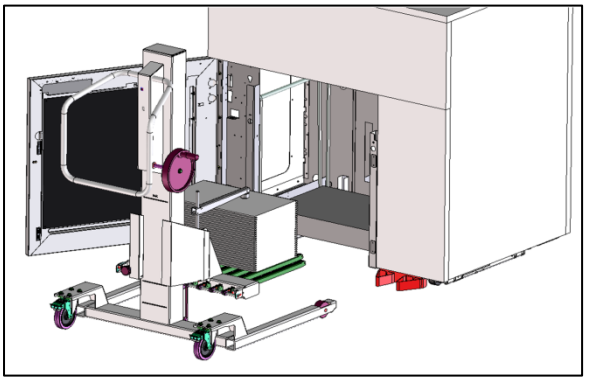

2. Lower the Cart by pressing the lower part of the elevation button (approximate height 210

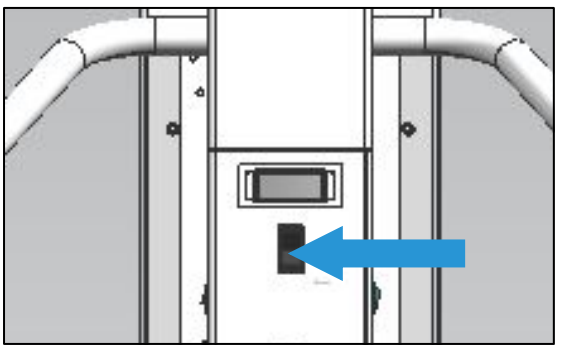

mm (8.25 in.).

3. Move the Cart forward until the front of the horizontal post mates with the red docking station at the base of the Air Table.

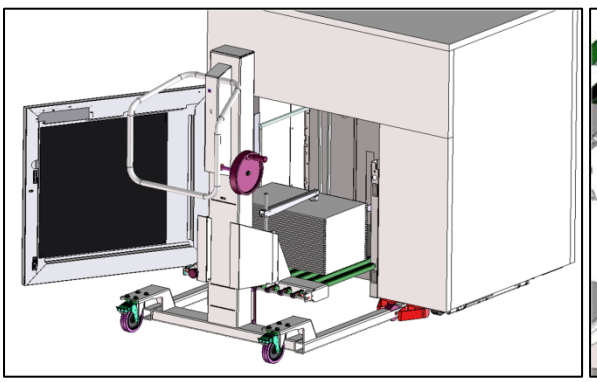

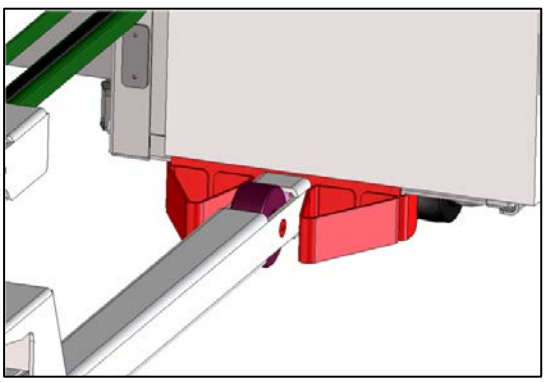

4. Lock the casters.

5. Gently lift up on the paper stack clamp near the clamp post, rotate it to one side, and rest it in the locator on the clamp post.

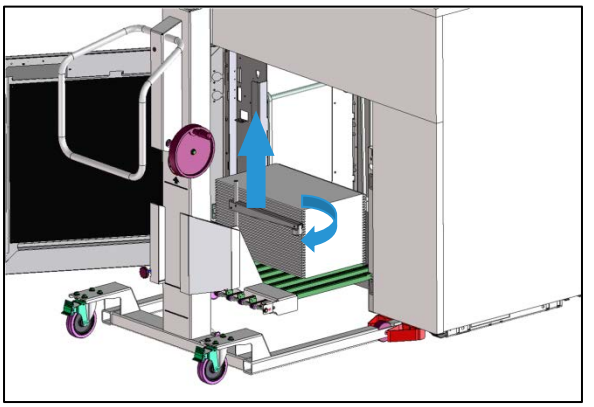

6. Turn the stock transport handle approximately 15 turns clockwise to transfer the paper stack to the Air Table.

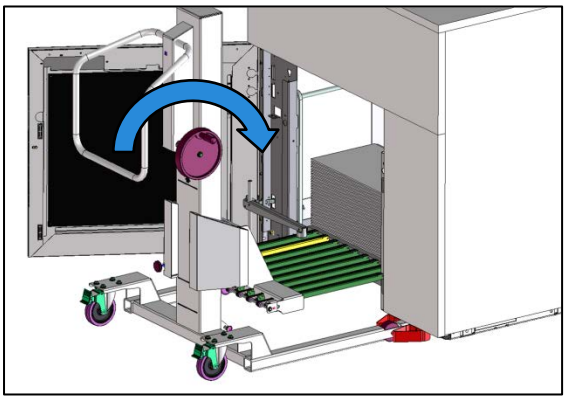

Offloading the Stack to a Work Table

This procedure assumes pick up from the XPS high position (600 mm).

1. Press the upper part of the elevation button to raise the media table height until it exceeds the height of the work table enough for the bottom of the paper stack to clear it.

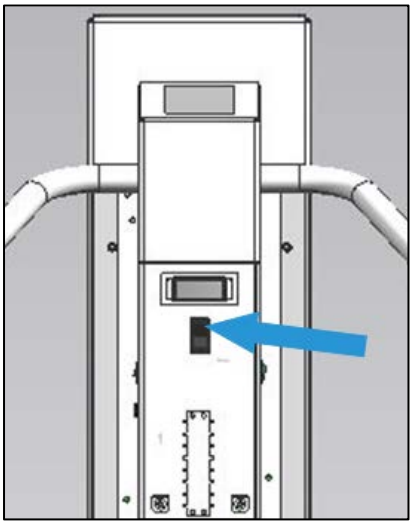

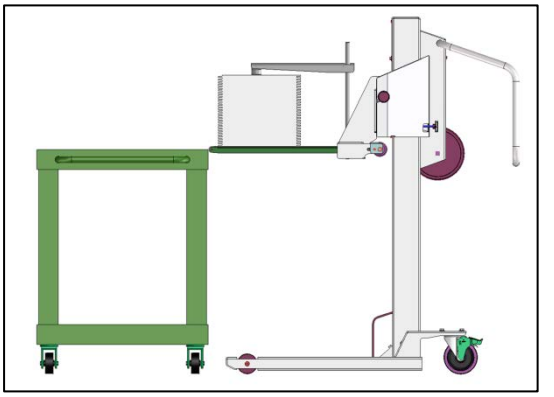

2. Press down on the lock tab on the rear casters to stabilize the Cart.

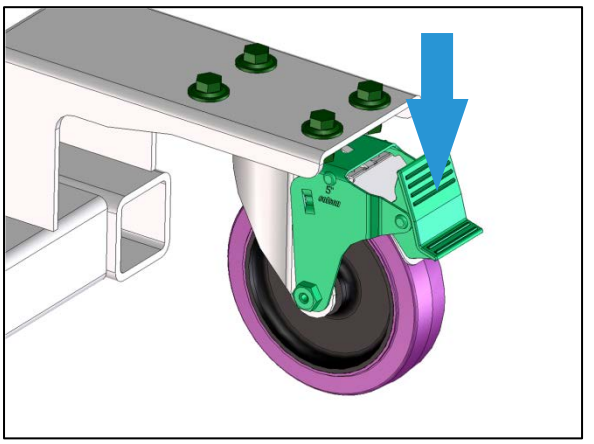

3. Gently lift up on the paper stack clamp near the clamp post, rotate it to one side, and rest it in the locator on the clamp post.

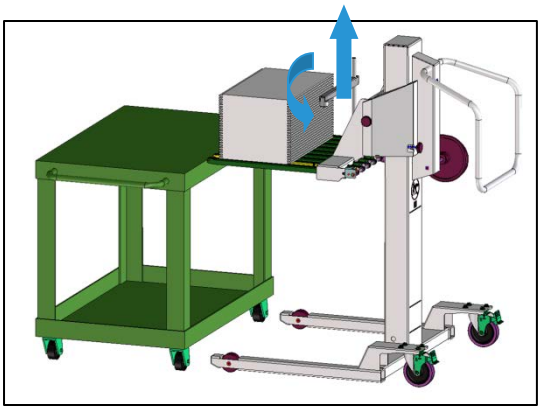

4. Turn the stock transport handle approximately 15 rotations clockwise to transfer the paper stack onto the work table.

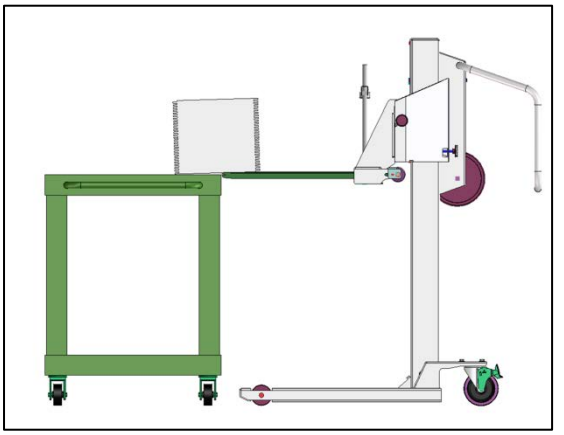

Note

When transporting to a flat work table, the paper stack may shift and lose stack quality.

Offloading the Stack to a Pallet

This procedure assumes pick up from the XPS low position (210 mm) and the paper stack will be delivered to either a tined or smooth surface.

1. Press the elevation button to set the media table height until it exceeds the height of the pallet enough for the bottom of the paper stack to clear it.
2. Lock the casters.
3. Turn the stock transport handle approximately 15 rotations clockwise to transfer the paper stack onto the pallet

Operating the Xerox Production Media Cart (iGen)

Customer Caveat (Paper Stacking)

For stacking sizes that are smaller than 14 in. (355.6 mm) in the process direction, add a single 14.33 (363.982 mm) wide sheet of card stock (270-300 gsm) to cover the 5-6 tine surfaces on the right side of the stacker pallet. This is to ensure adequate stacker for smaller size papers. Larger sizes, such as 11 x 17 in, 14.33 x 20.5 in, 14.33 x 26 in., do not require the additional sheet.

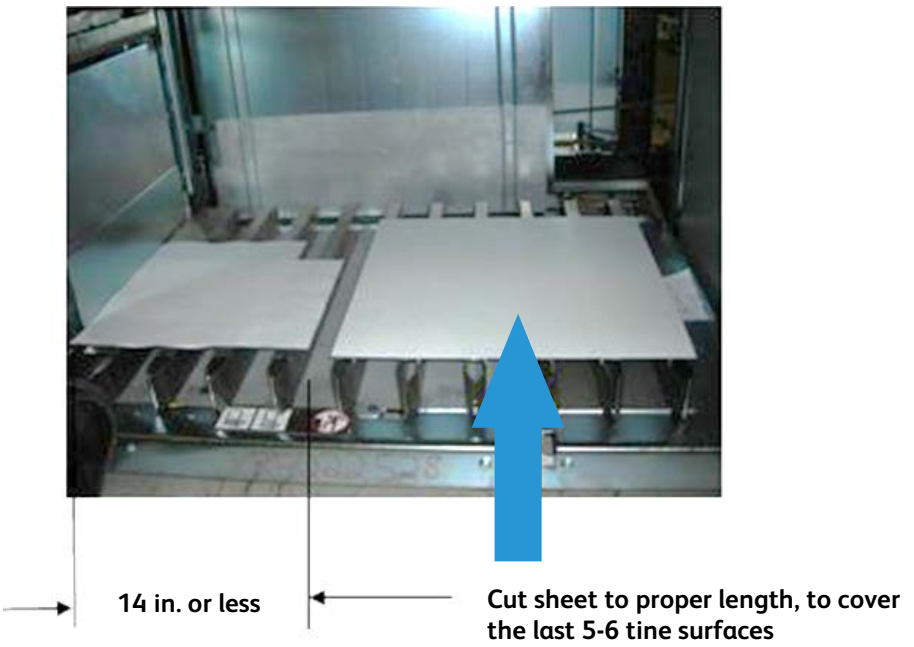

Docking the Xerox Production Media Cart with the Xerox iGen Stacker Pallet with Power Eject Kit

It is recommended that you first practice docking the Production Media Cart (Cart) without a paper stack loaded.

Warning

Do not exceed the load capacity of 160 lbs. (72.6 kg) to avoid personal injury and damage to the Cart.

1. Open the front door of the stacker module.

2. Set the Media Cart to the appropriate height.

   a. Locate the line on the cart post that corresponds to the iGen stacker height of 103 mm.
   b. Press the elevation button to match the short lines on the sides to the line on the cart post.

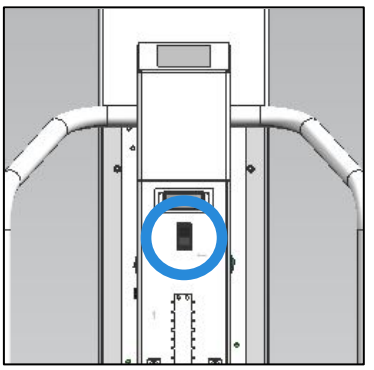

Elevation button

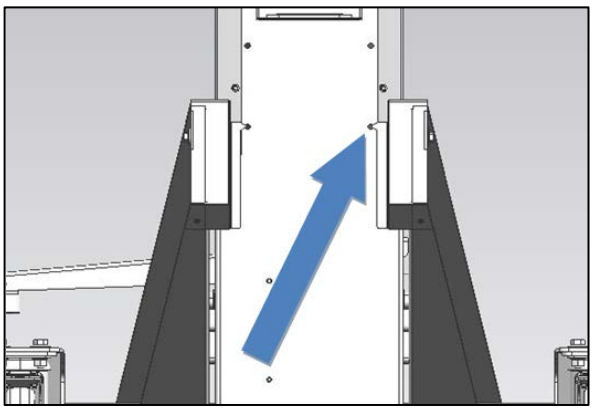

Line up pointer to hole

3. Roll the cart into position. Insert tang on right front leg of the media cart into the Y shaped groove of the docking bracket. Ensure that the end of the cart butts against the left side docking bracket.

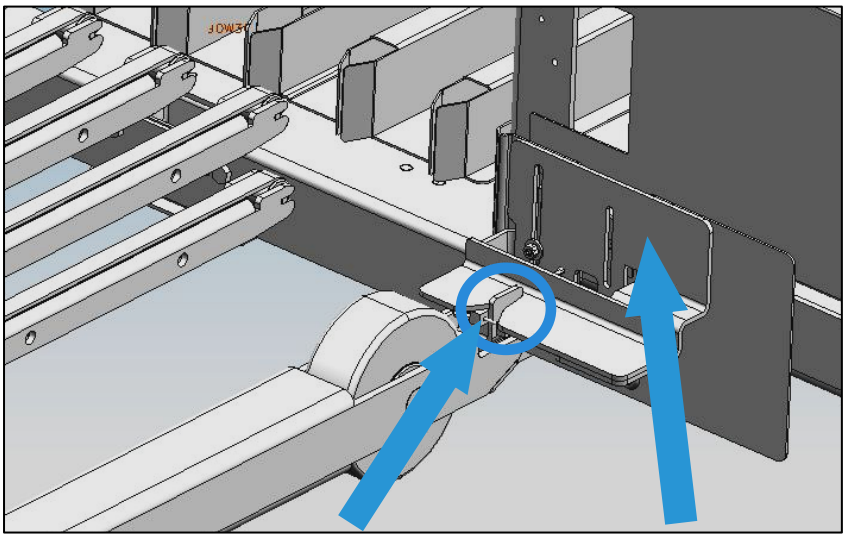

Right side tang **Docking bracket**

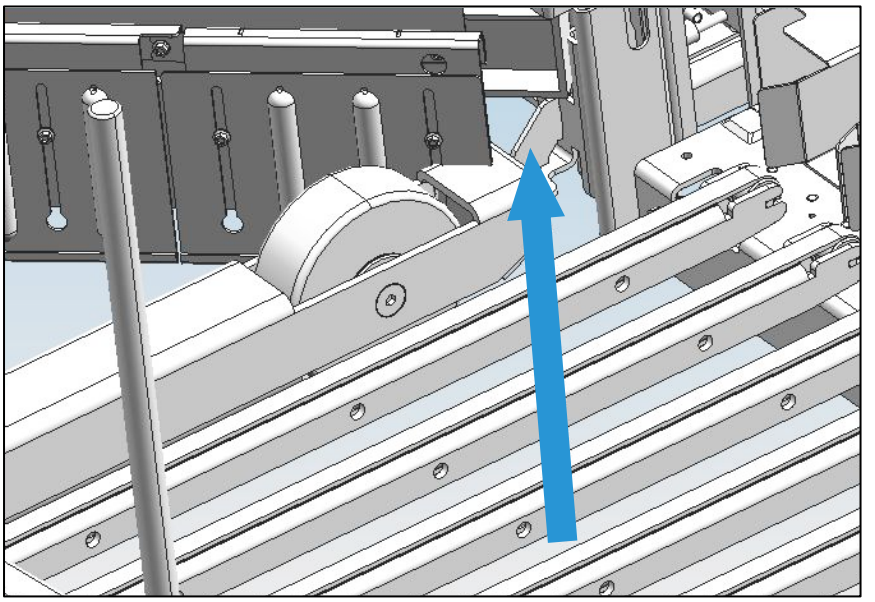

Left side docking bracket

4. Powered eject is triggered to eject 2 seconds after the cart is pushed into the docked location. Cart with pallet out is shown.

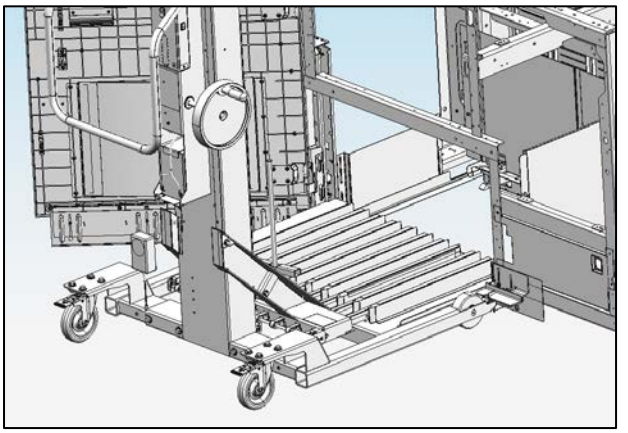

5. A red colored emergency Stop button is mounted on the machine frame for customer controlled emergency stop. Press button to stop. Press button 2nd time to continue. The power eject system will reset itself after an emergency stop.

   Note
   The emergency Stop button is located on the front of the iGen stacker module

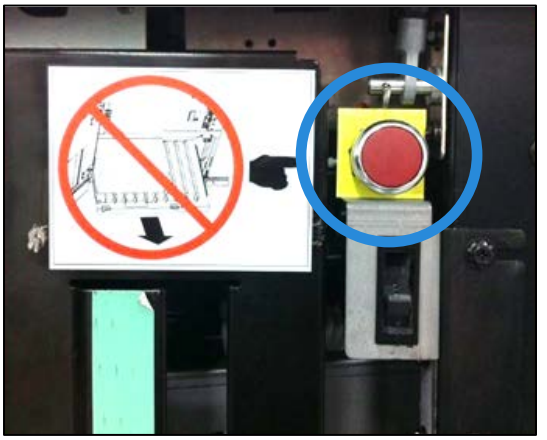

6. Press down on the lock tab on the rear casters to stabilize the Cart.

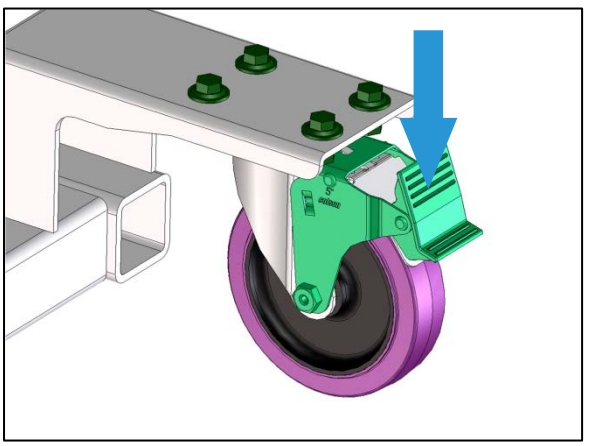

Lifting the Stack from the iGen Stacker

1. Press the upper part of the elevation button to raise the height of the Cart until the bottom of the cart clears the iGen Stacker.

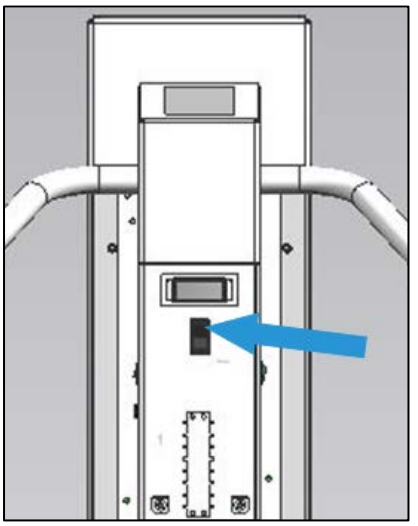

Bottom of yellow tine is above the pallet surface

2. Gently lift up on the paper stack clamp near the clamp post to free it for rotation. Lift it high enough so that it will clear the top of the paper stack.

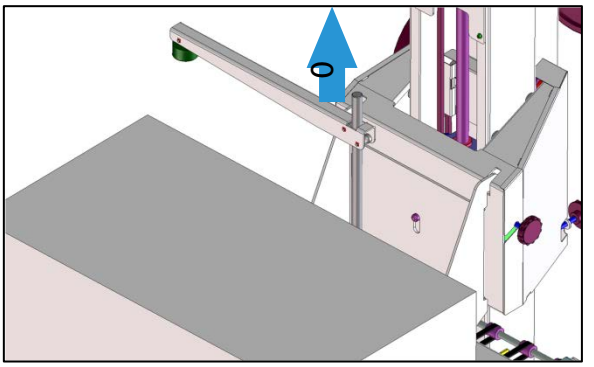

3. Rotate the clamp and position it over the paper stack.

4. Gently press the clamp at the clamp post to secure it.

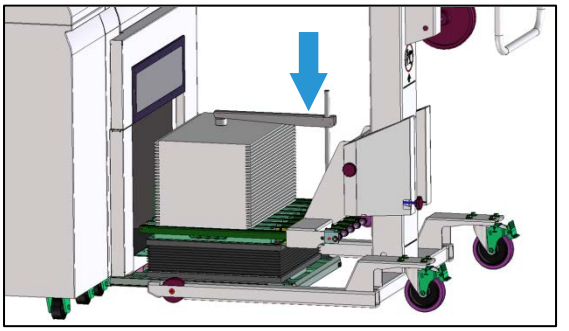

5. Press the tab on the upper part of the caster lock on the rear casters to release them.

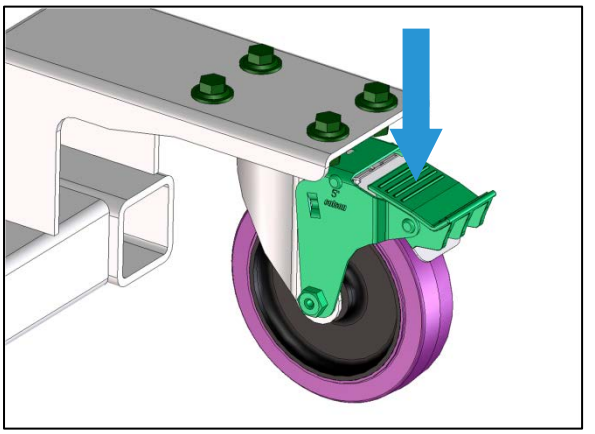

6. Guide the Cart out until it clears the stacker.

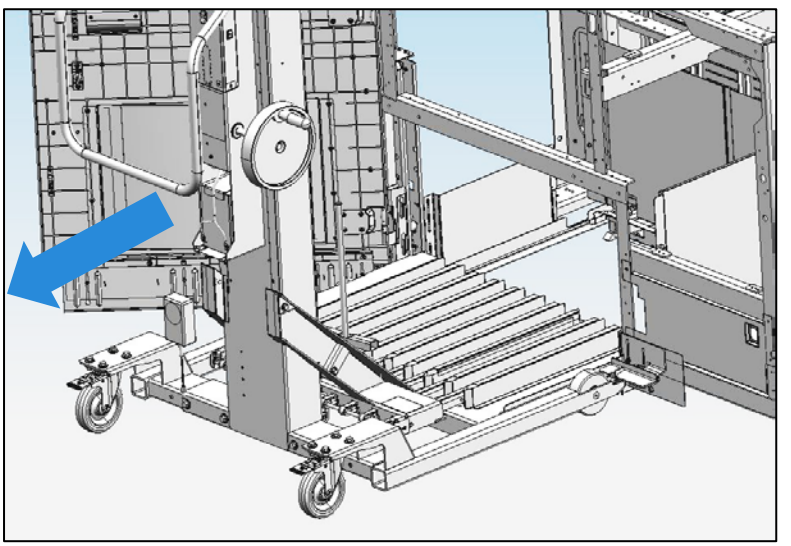

7. Pallet returns to machine. Close front door to continue stacker operation.

Transferring the Stack to the CP Bourg BSFEx Air Table

1. Position the Cart in front of the CP Bourg BSFEx Air Table.

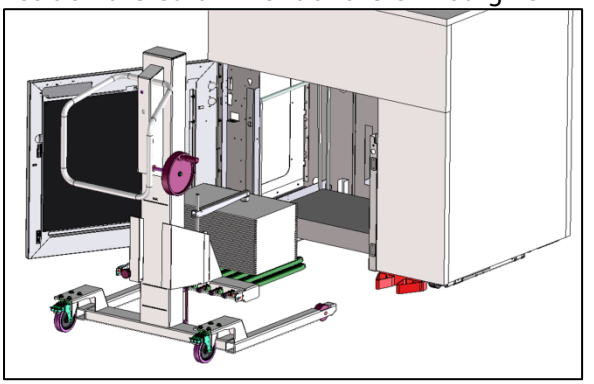

2. Lower the Cart by pressing the lower part of the elevation button (approximate height 210 mm (8.25 in.).

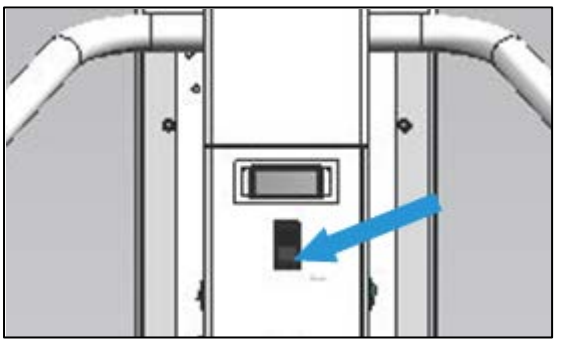

3. Move the Cart forward until the front of the horizontal post mates with the red docking station at the base of the Air Table.

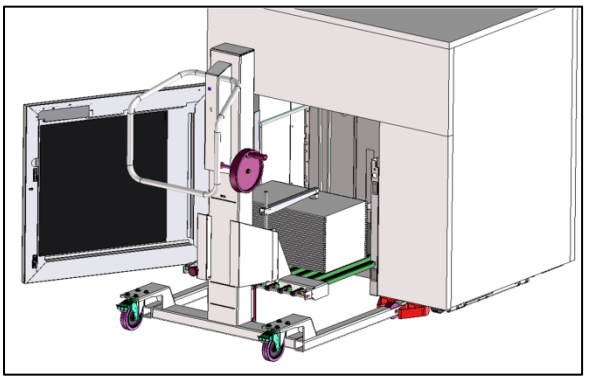

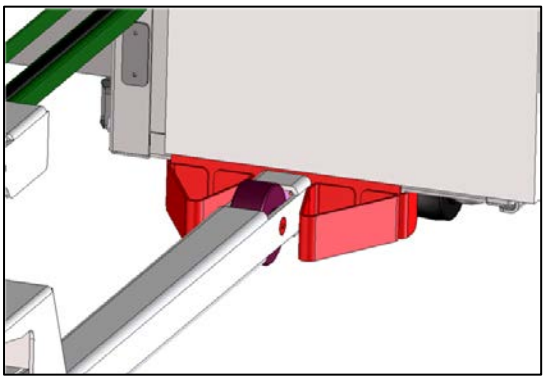

4. Lock the casters.

5. Gently lift up on the paper stack clamp near the clamp post, rotate it to one side, and rest it in the locator on the clamp post.

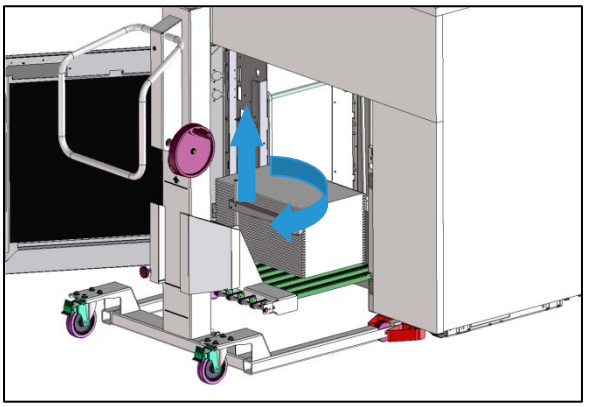

6. Turn the stock transport handle approximately 15 turns clockwise to transfer the paper stack to the Air Table.

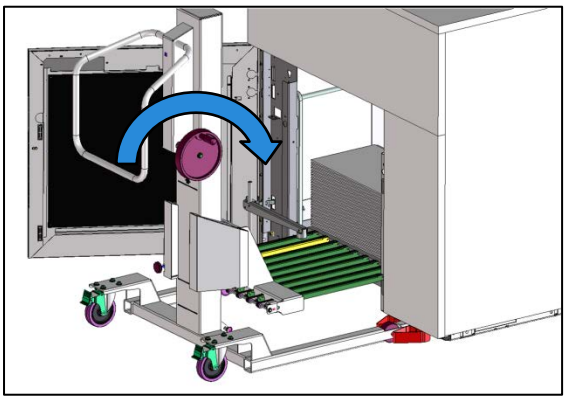

Offloading the Stack to a Work Table

This procedure assumes pick up from the XPS high position (600 mm).

1. Press the upper part of the elevation button to raise the media table height until it exceeds the height of the work table enough for the bottom of the paper stack to clear it.

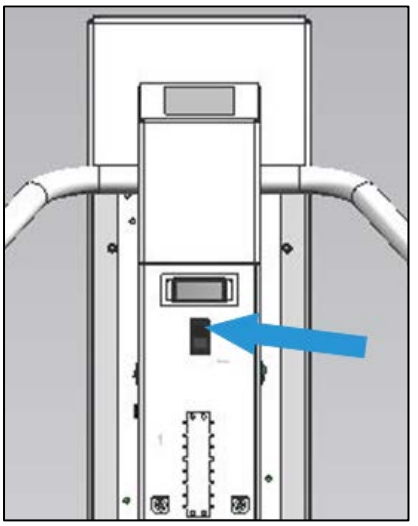

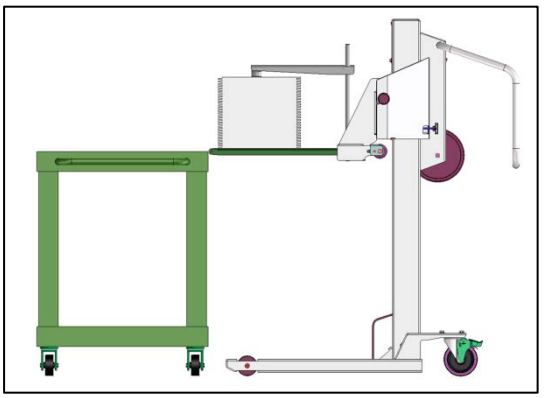

2. Press down on the lock tab on the rear casters to stabilize the Cart.

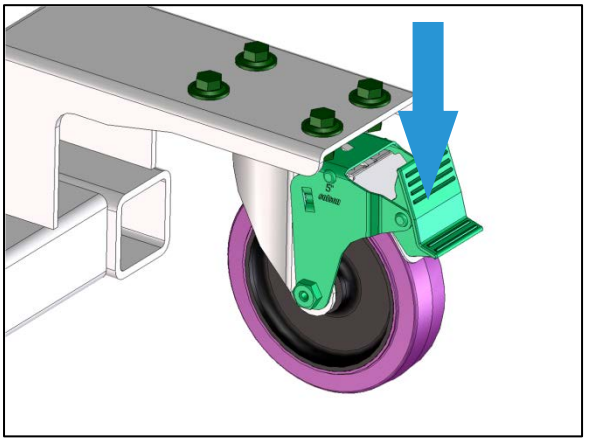

3. Gently lift up on the paper stack clamp near the clamp post, rotate it to one side, and rest it in the locator on the clamp post.

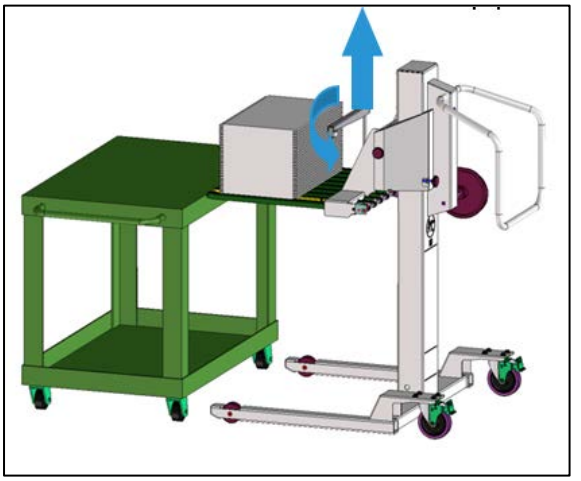

4. Turn the stock transport handle approximately 15 rotations clockwise to transfer the paper stack onto the work table.

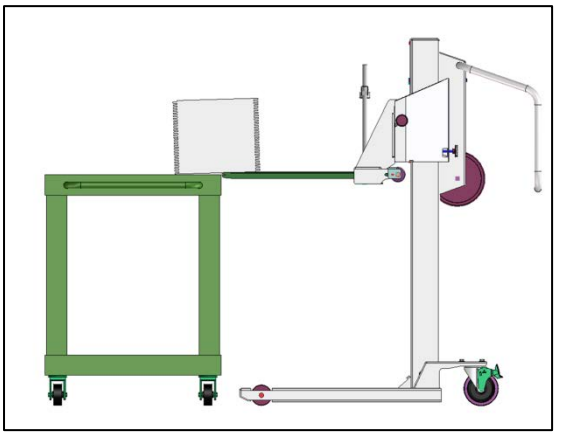

Note

When transporting to a flat work table, the paper stack may shift and lose stack quality.

Offloading the Stack to a Pallet

This procedure assumes pick up from the XPS low position (210 mm) and the paper stack will be delivered to either a tined or smooth surface.

1. Press the elevation button to set the media table height until it exceeds the height of the pallet enough for the bottom of the paper stack to clear it.
2. Lock the casters.
3. Turn the stock transport handle approximately 15 rotations clockwise to transfer the paper stack onto the pallet.

xerox