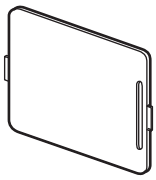

1

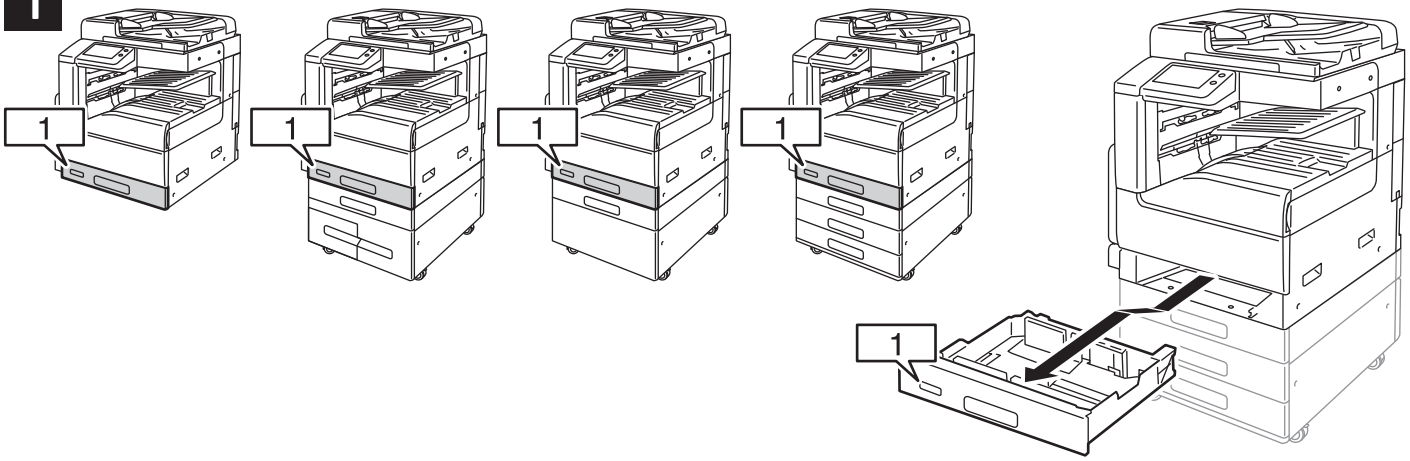

2

2.1

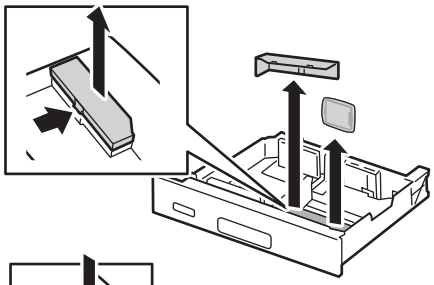

2.2

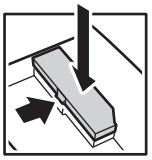

3

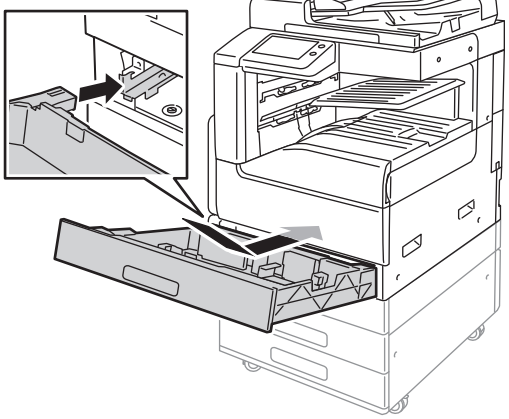

4

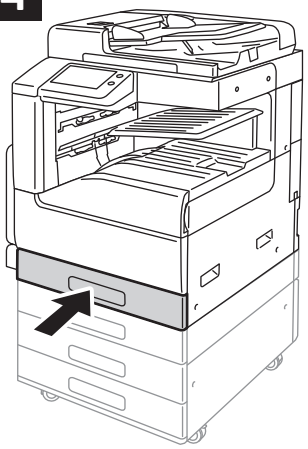

5

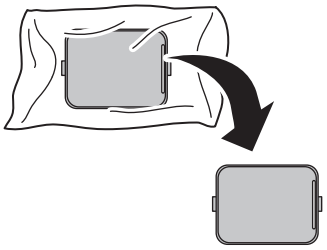

6

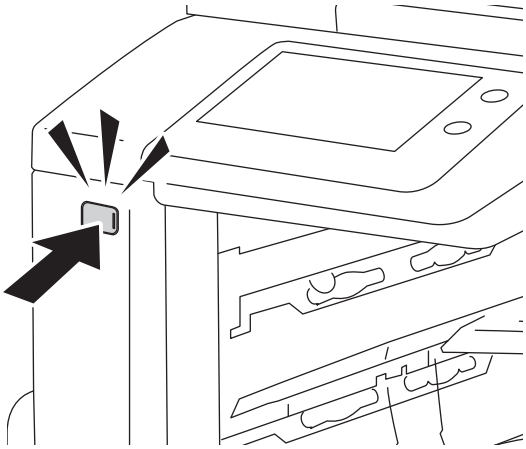

607E18200 Rev A

© 2016 Xerox Corporation. All rights reserved.
Xerox®, Xerox and Design® are trademarks of Xerox Corporation in the United States and/or other countries.

www.xerox.com/support