xerox™

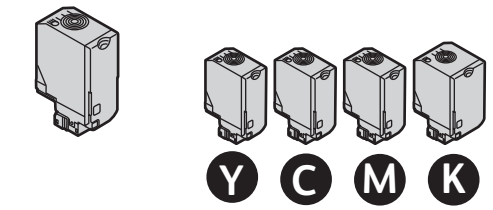

1

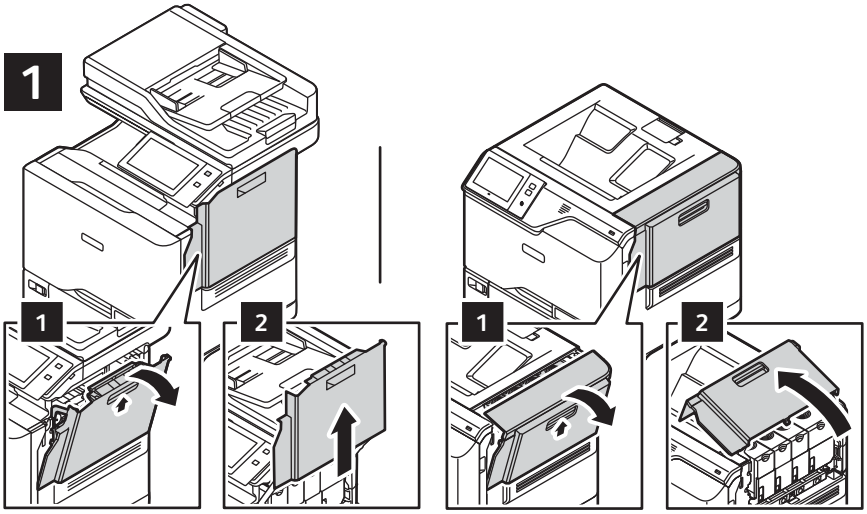

2

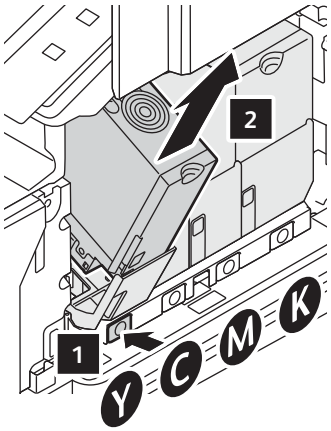

3

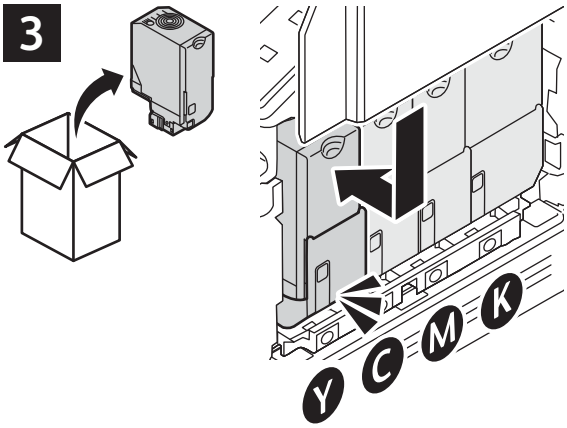

4

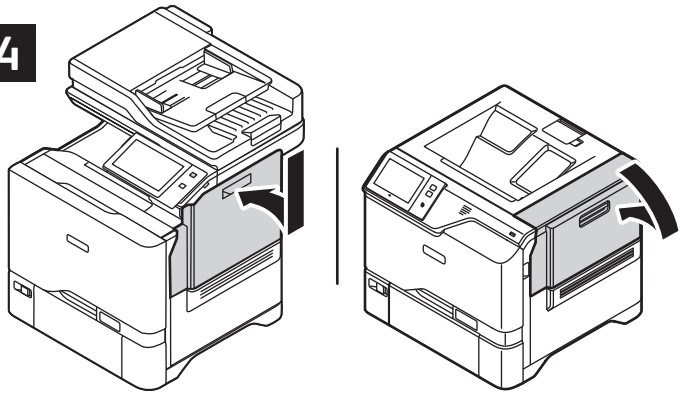

5

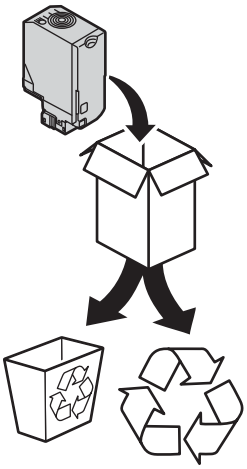

www.xerox.com/gwa

PUB1564-002

607E41870 Rev B

www.xerox.com/support