xerox WorkCentre 3550

700N00216B
WWW.XEROX.COM

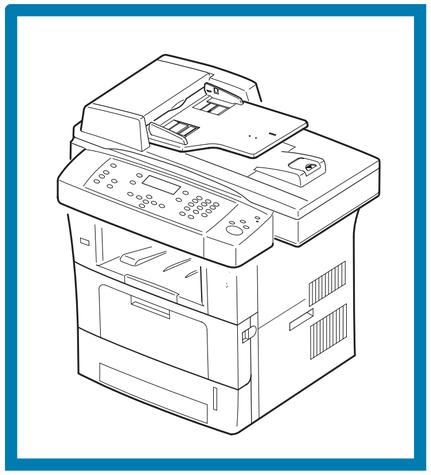

1 a

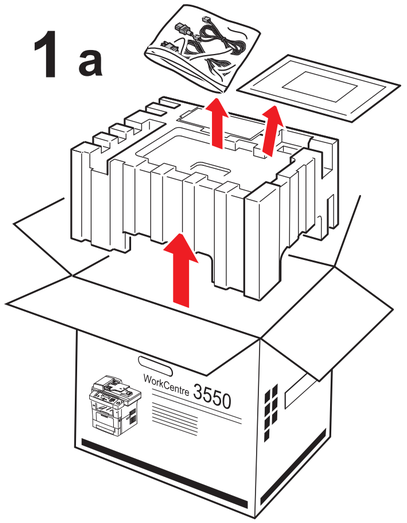

b

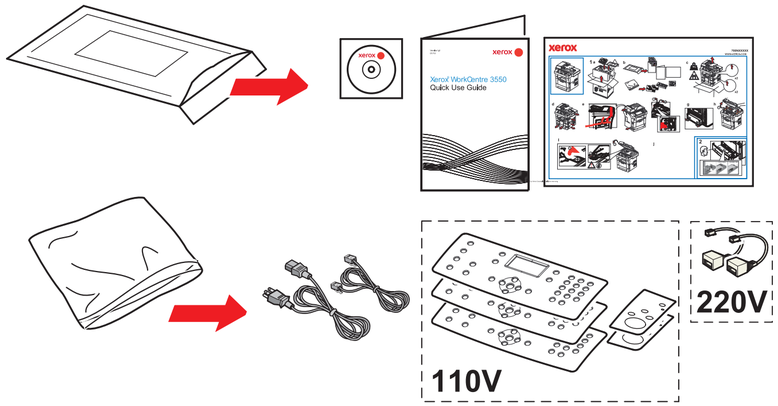

c

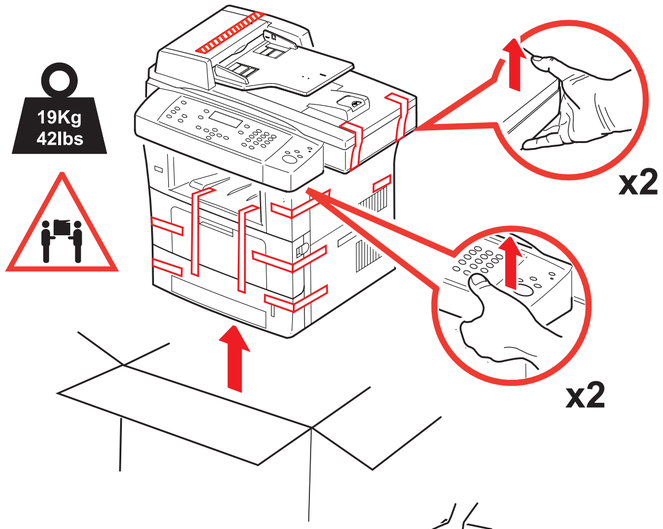

d

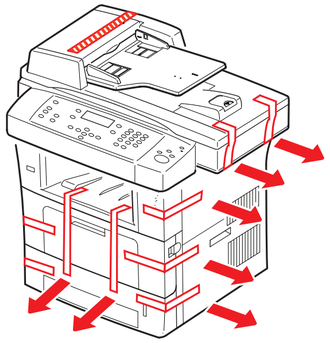

e

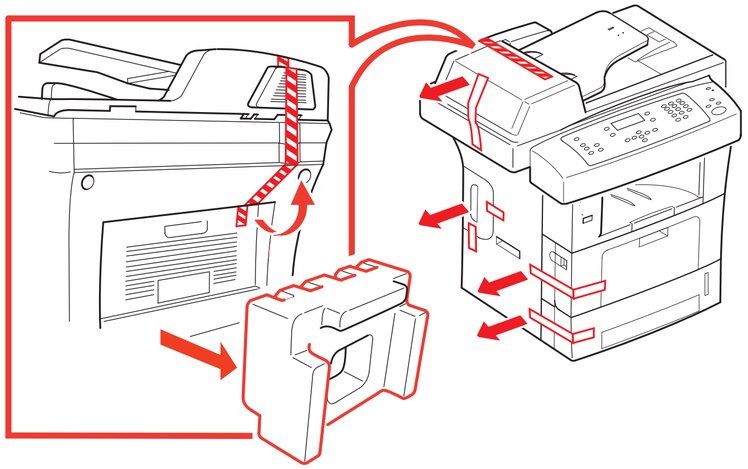

f

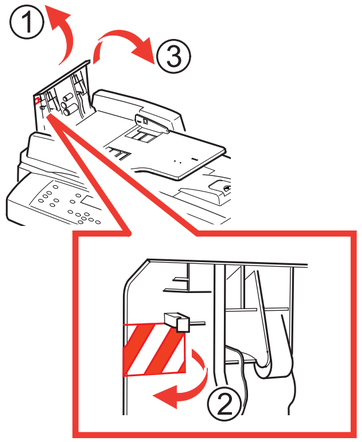

g

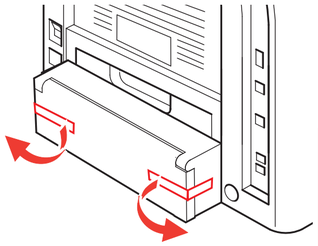

h

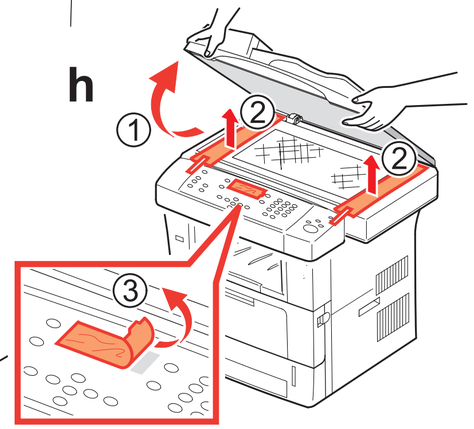

i

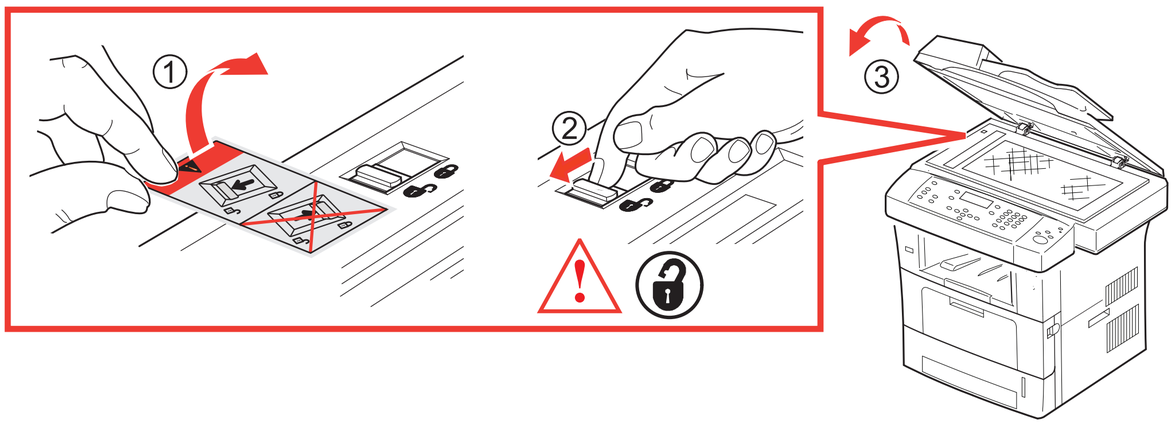

j

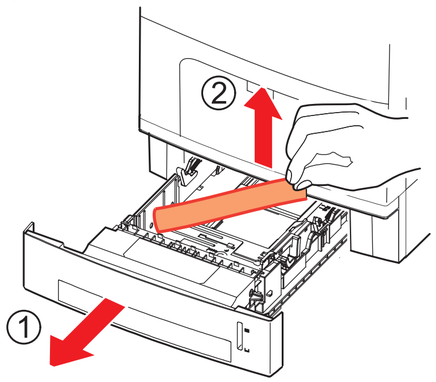

2

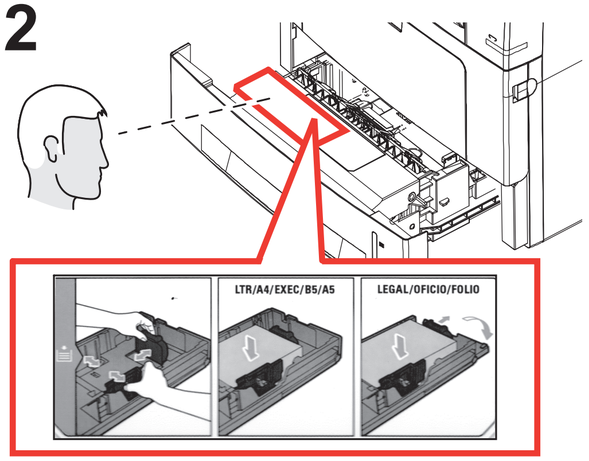

© Copyright 2010 by Xerox Corporation. All rights reserved.