xerox

Phaser 3635MFP/S
Phaser 3635MFP/X
WorkCentre 3550

604E42780B

WWW.XEROX.COM

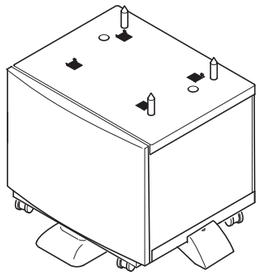

1

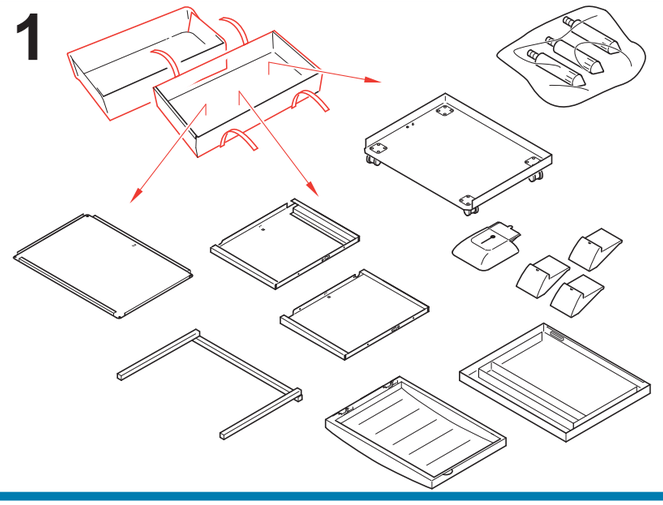

2

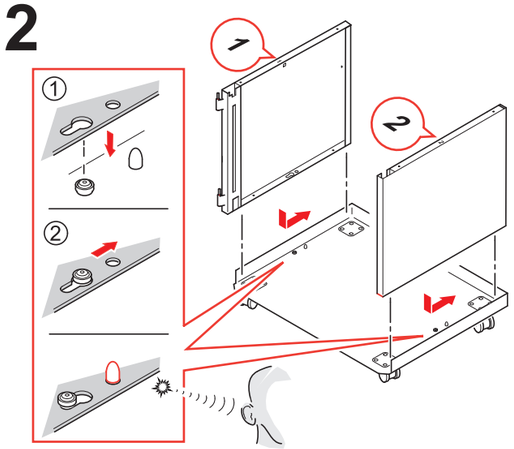

3

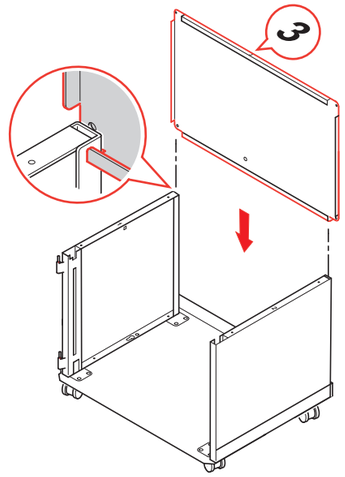

4

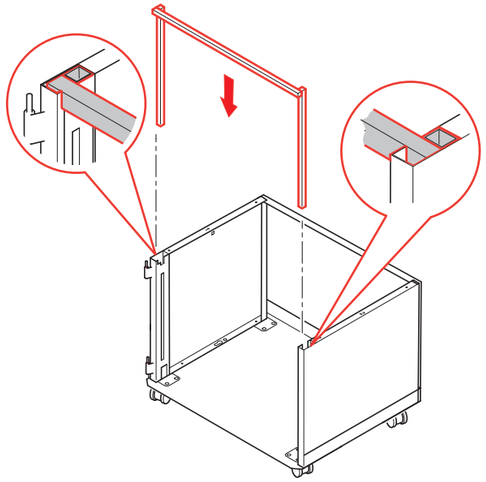

5

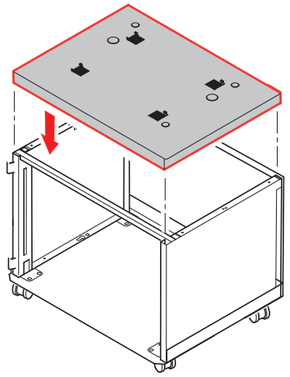

6

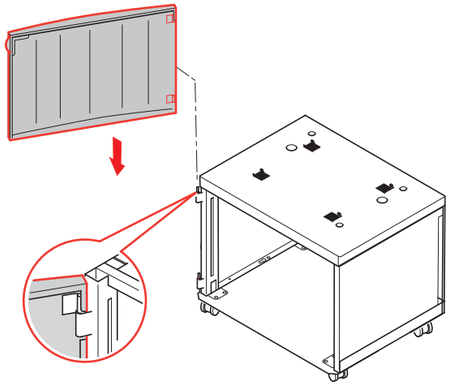

7

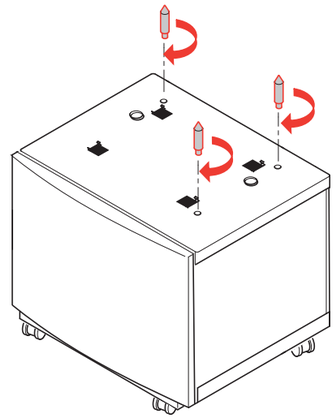

8

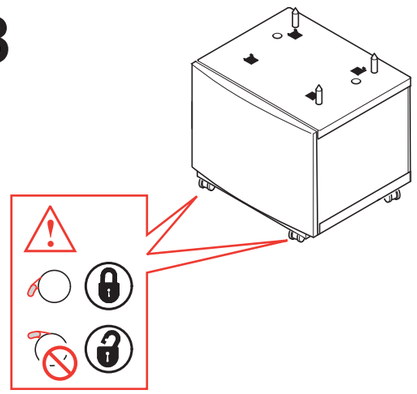

9a

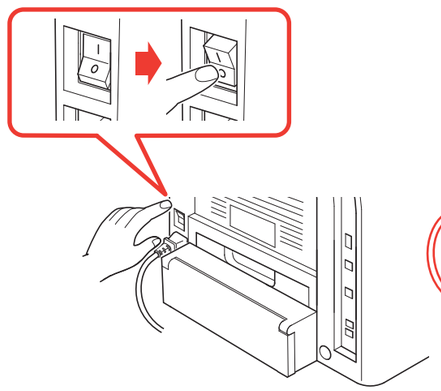

b

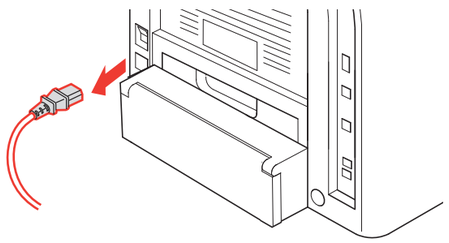

© Copyright 2010 by Xerox Corporation. All rights reserved.